SAGITTARIUS

TAPS & SHOWERING

BARI MONOBLOC BASIN MIXER

BA/106

Construction	Brass Body, Zinc-alloy handle
Finishes	Chrome (Ni : 8-12um, Cr : 0.25-0.3um)
Product Type	Contemporary
Water Pressure Tested Between	Min. 0.2 bar, Max. 6.0 bar
Standards	Complies with BS6920, BS EN200
Certification	WRAS (1710044) approved and certified, manufactured to comply with ACS
Cartridge	CeramTec Triduon® Thermostatic Ceramic disk cartridge
Aerator	Neoperl spout aerator
Fitting	UK: M10 x 350mm G½" BSP Female Flexi Tails EU: M10 x 350mm G3/8" BSP Female Flexi Tails
Guarantee	10 years against manufacturing faults (excluding serviceable parts)
Additional Information	Supplied with G1¼" sprung waste(UK only); Triduon® Volume Limiter (Optional)



Operating Water Pressures



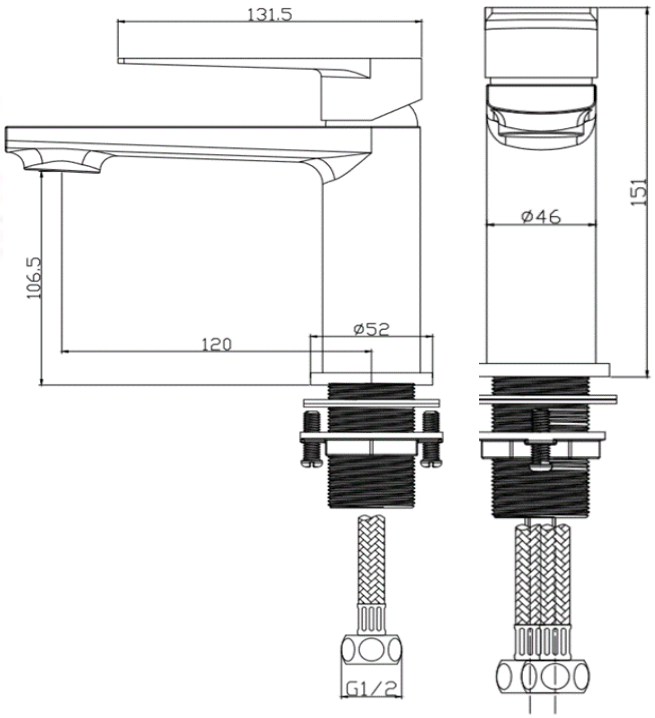

The information contained on this page was correct at the date of issue. Fitting dimensions are provided as a guide only. Some variation may occur due to manufacturing tolerances. We pursue a policy of continuing improvement in design and performance of our products and so reserve the right to change specifications without prior notice

FOR FURTHER ADVICE PLEASE CONTACT :-
SAGITTARIUS LTD UNIT 1 LOWER VICTORIA STREET—CHADDERTON—OLDHAM—OL9 9TU TEL:0616 6202029
EMAIL:TECHNICAL@SAGITTARIUSTAPS.CO.UK

Flow Rates (Litres per minute)

System Pressure	0.1 Bar	0.2 Bar	0.3 Bar	0.5 Bar	1.0 Bar	1.5 Bar	2.0 Bar	3.0 Bar	4.0 Bar	5.0 Bar
	2.0	3.8	-	5.8	9.5	-	13.9	15.6	-	-

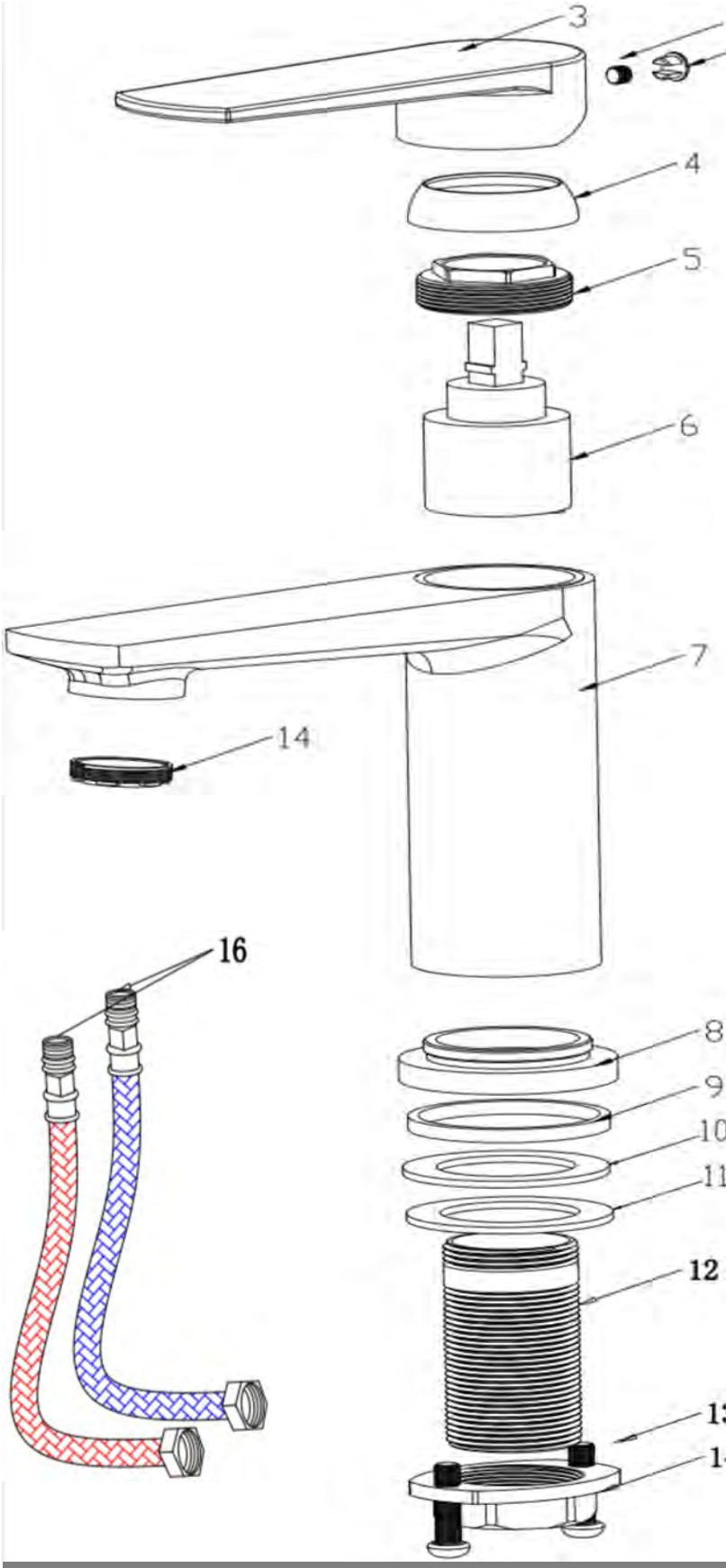

No.	DESCRIPTION	QTY
16	FLEXI TAIL	2
15	AERATOR	1
14	SCREW	1
13	BACK NUT	1
12	BSP TAIL	1
11	WASHER	1
10	WASHER	1
9	RUBBER GASKET	1
8	BASE PLATE	1
7	TAP BODY	1
6	CARTRIDGE	1
5	LOCK NUT	1
4	COVER	1
3	HANDLE	1
2	SCREW	1
1	COVER CAP	1

FOR FURTHER ADVICE PLEASE CONTACT :-
SAGITTARIUS LTD UNIT 1 LOWER VICTORIA STREET—CHADDERTON—OLDHAM—OL9 9TU TEL:0616 6202029
EMAIL:TECHNICAL@SAGITTARIUSTAPS.CO.UK