SAGITTARIUS

TAPS & SHOWERING

CONCEALED THERMOSTATIC 572 SHOWER VALVE CHROME

Construction	Brass body
Finishes	Chrome plated to BS EN248
Product Type	Contemporary
Water Pressure Tested Between	Min 0.5 Max 7.0bar
Standards	Complies with BSEN 1111
Certification	Manufactured to comply with TMV2
Cartridge	Thermostatic Polymer– Vernet
Packaging	270x225x130 (2.84kgs)
Guarantee	10 years –casting and chrome finish, 3 years—Serviceable parts, 1 Year– Gold/Bespoke Finishes.
Additional Information	1.Temperature : Pre-set 38C with push button override to 48C 2.Automatic shut off in the event of hot or cold water supply failure

Image below is our EL/572/C and is for illustration purposes only. Valve can be purchased with handles to suit range as required.



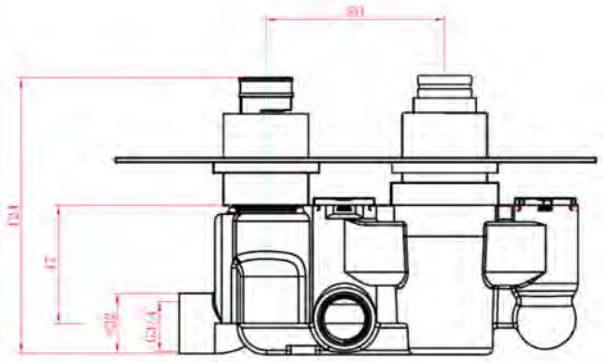

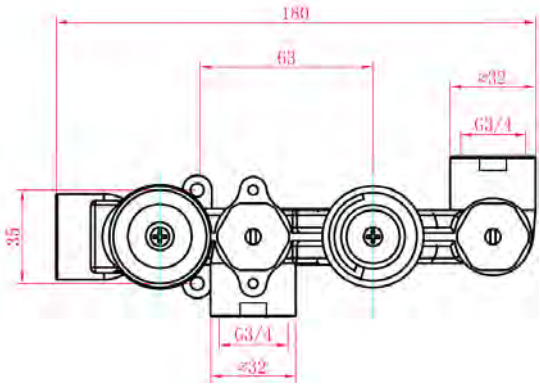

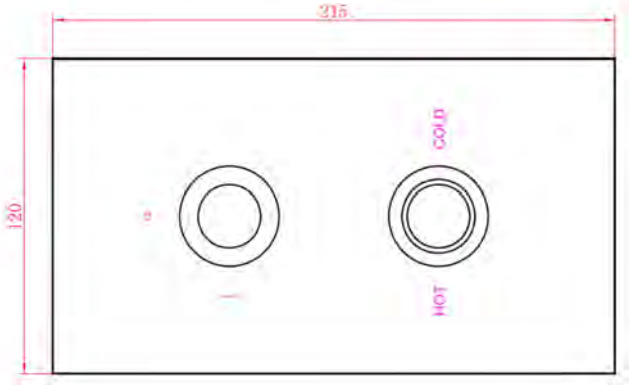

Flow Rates (litres per minute)

System Pressure	0.1 Bar	0.2 Bar	0.3 Bar	0.5 Bar	1.0 Bar	1.5 Bar	2.0 Bar	3. 0 Bar
EL/572/C		9.7		10.7	12.7		15.7	18.1

Exploded parts drawing

Sagittarius thermostatic concealed shower model 572

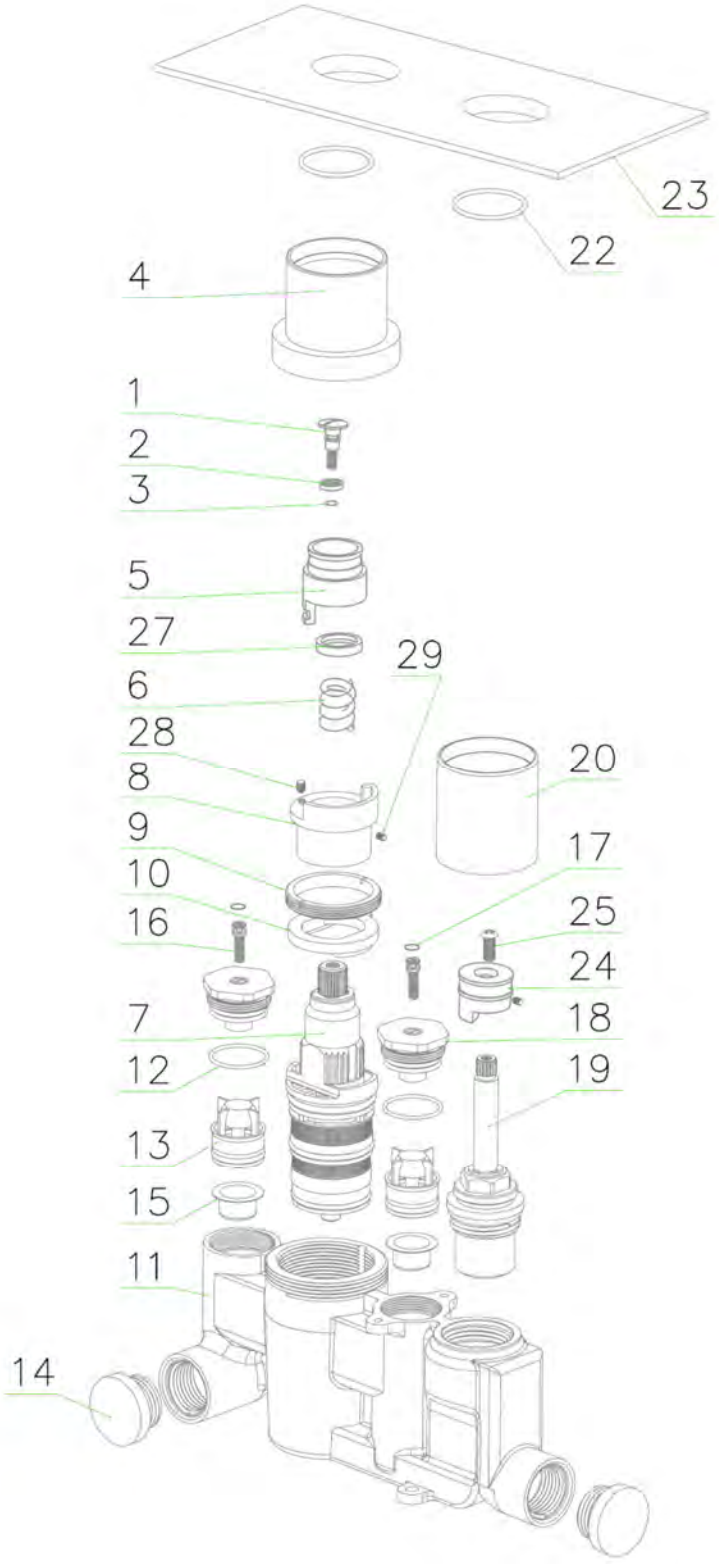

OPERATING CONDITIONS OF USE –

Before installation the operating conditions of use must be checked. The table below contains details of the necessary conditions of operation. If your water supply cannot meet these conditions then the valve cannot be guaranteed to operate as a Type 2 valve. This valve is suitable for use in both LP (BS 1287) and HP (BS 1111) operating conditions.

Please note valves must always be operated within either the range for BS 1287 or BS1111. Valves cannot operate effectively where a hot or cold pressure system crosses the boundaries of the two ranges. In the case where operating conditions such as these exist; either the hot or cold pressure will require to be reduced or boosted so as to be within a selected range.

Operating pressures above 5.0 Bar will require the installation of a pressure reducing valve.

	BS1287	BS1111
Maximum Static Pressure	10 bar	10 bar
Flow pressure (Hot & Cold)	0.1 bar – 1 bar	0.1 bar – 1 bar
Hot Water Supply Temperature	55 – 65 °C	55 – 65 °C
Cold Water Supply Temperature	MAX 25 °C	MAX 25 °C
Mixed Water Temperature	MAX 46 °C	

NOTE – The mixed outlet temperature and the system hot temperature must be different by a minimum of 10°c for the shut off facility to function.

RECOMMENDED OUTLET TEMPERATURES –

Bath Fill	44 °C *
Shower	41 °C

⊙ The mixed water temperature at the terminal fitting must never exceed 46 °C

⊙ The maximum mixed water temperature can be 2°C above the recommended maximum set outlet temperatures.

* 46°C is the maximum mixed water temperature from the bath tap. The maximum temperature takes account of the allowable temperature tolerances inherent in thermostatic mixing valves and temperature losses in metal baths.
It is not a safe bathing temperature for adults or children.
The British Burns Association recommends 37 to 37.5°C as a comfortable bathing temperature for children. In premises covered by the Care Standards Act 2000, the maximum mixed water outlet temperature is 43°C.

TROUBLE-SHOOTING

Problem	Solution
Shower will not run hot enough when first installed	Check for debris Check hot water temperature
Cold water running back through the valve into the hot watersystem.	Check and clean the check valve cartridges and filterslocated under the check valves.

TESTING METHOD –

The valve should be tested to ensure correct operation at commissioning and thereafter at intervals no greater than 12 months.

Notes:

- The testing will only require a normal thermometer with ascale greater than 65°C. The temperature sensitive element of the thermometer should always be fully inserted into the water flow.
- Temperature readings should be taken at the normal flow rate after allowing for the system to stabilise.
- The sensing part of the thermometer probe must be fully submerged in the water that is to be tested.

When commissioning/testing is due the following performance checks shall be carried out:

1. Measure the mixed water temperature and record.
2. The testing will only require a normal thermometer with a scale greater than 65°C. The temperature sensitive element of the thermometer should always be fully inserted into the water flow.
3. Carry out a cold fail/safe shut–off test by using the isolation valve to shut off the water to the cold supply.
4. Wait 5 seconds, if water is still flowing check that the water temperature is below 46°C. The flow should stop or reduce to a trickle.
5. Open cold water isolation valve and measure mixed water temperature.

warrants this product against manufacturing defects and that it is suitable for use under the operating conditions specified in this instruction sheet.

THERMOSTATIC MIXER VALVE INSTALLATION –

- This guide provides instruction for the installation of Dual & Triple Control Thermostatic Shower Valves. It is beyond the scope of this guide to provide detailed instructions for the installation of auxiliary products which may be attached to these valves. Please consult you installer and any guides which are provided with the other products.
- Most problems associated with the operation of thermostatic shower valves are caused by debris in the new pipe work getting into the thermostat. These problems are easily avoided by thoroughly flushing the pipe work BEFORE the shower valve is fitted.
- Dual & Triple Control Concealed Shower Valves are suitable for use with all water supply systems up to a maximum of 5 bar. Pressures above this limit will require the fitting of pressure reducing valves.
- This product and any accessories fitted with it, must be installed in such a way as not to cause water damage during use.
- The mixer valve is precision engineered and will give continuous safe and controlled performance providing it is installed, commissioned and maintained according to the instructions contained in this document.
- The valve must be so installed that it is readily accessible for commissioning and maintenance when being installed in accordance with TMV2.
- The valve is fitted with integral "listed" single check valve cartridges which command the water supply; therefore the thermostatic valve is protected against cross–flow due to unbalanced line pressures as required by the Water Supply (Water Fittings) Regulations 1999.
- The valve must be installed with isolation valves on both the hot and cold water supplies as close as possible to the valve; so as to allow the valve to be commissioned and tested correctly.
- The valve is supplied with integral strainers on the hot and cold water supplies therefore in–line strainers should not be required.

Fig1:

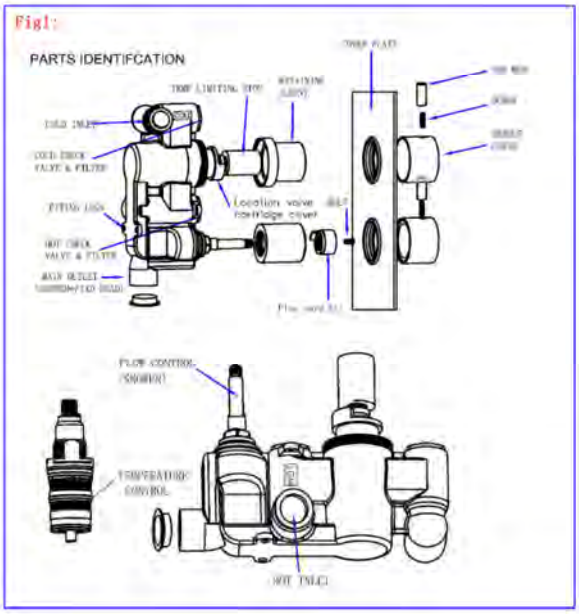

Fig2:

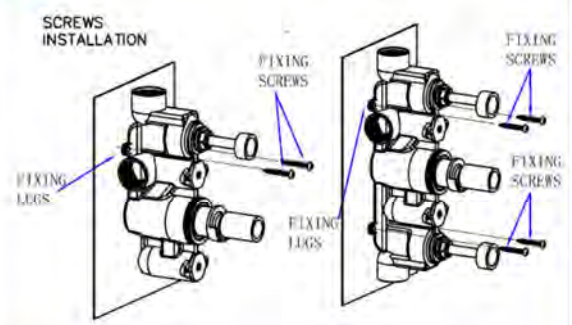

Fig3: CONNECT WATER OUTLETS

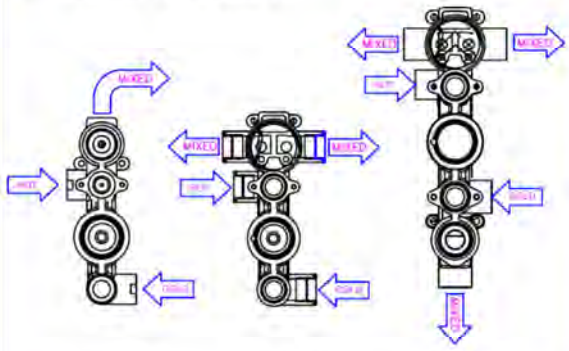

Fig4:

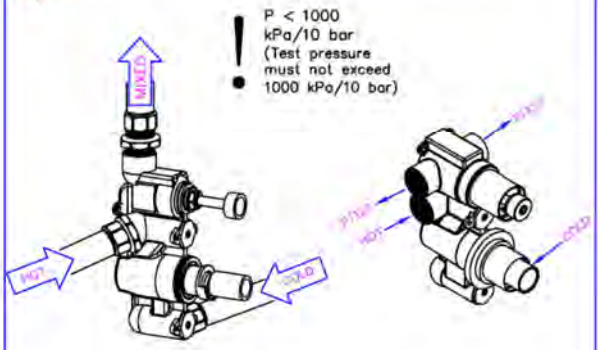

CHECK WATERTIGHTNESS

Fig5:

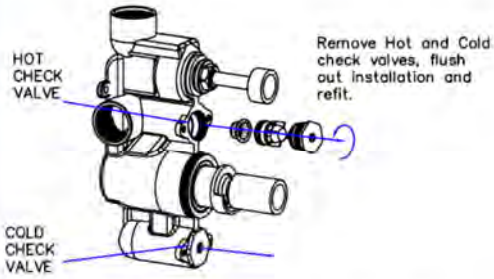

REMOVE CHECK VALVES AND FLUSH INSTALLATION

Fig6:

FIT WALL LINING

(172.177.277COVER PLATE)
Apply a small bead of silicone behind the faceplate and fit over the chrome sleeves into position.

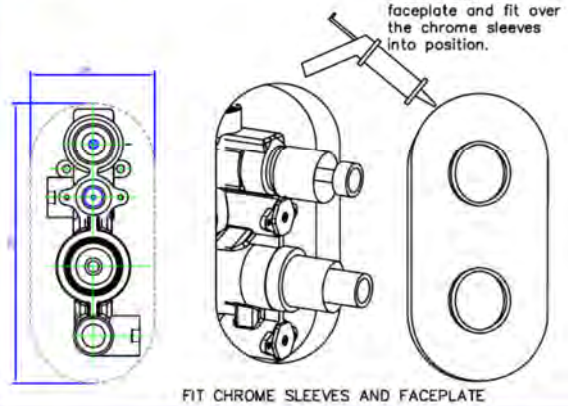

FIT CHROME SLEEVES AND FACEPLATE

TEMPERATURE SETTING

The thermostat factory set . To ensure correct operation check the temperature of the water running .
To set the temperature . remove the handle .Rotate the exposed handle sleeve 2 spindle (clockwise for cold . and anti-clockwise for hot) until the maximum desired showering
temperature is set (38℃–suggested maximum"pre-set "temperature) .
Push the handle onto the spindle and tighten with the bolt and finnial .so that stop inside the handle butts upto the right hand side of the fixed stop on the handle sleeve2.

The thermostat is now set to it's new temperature and can only be increased or decreased by repeating this process.

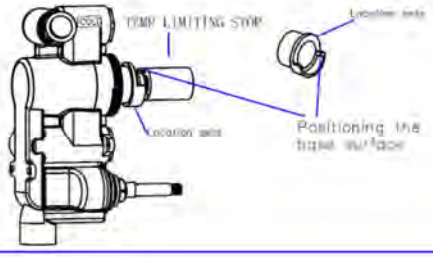

Fig7: DIMENSIONS

1 way 2 way & 3 way
Front of wall (lining and tiles installed)

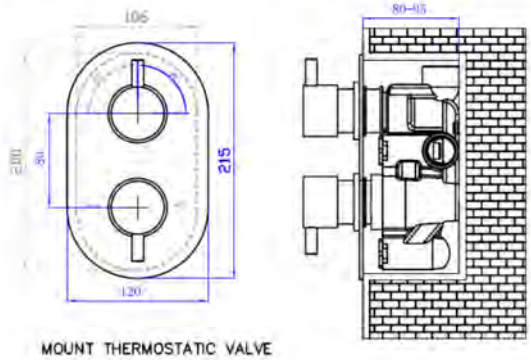

MOUNT THERMOSTATIC VALVE

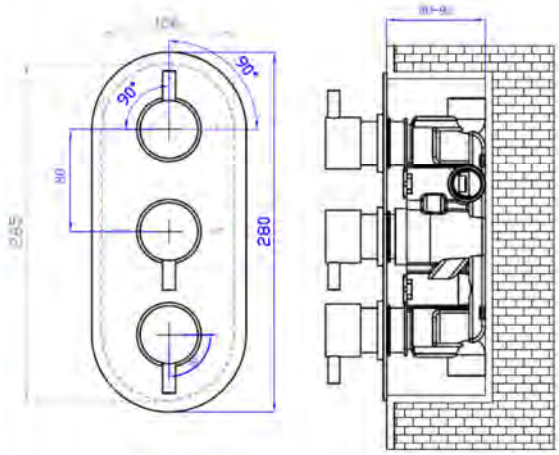

COMMISSIONING –

The mixer valve is factory set to the required temperature. Check the valve after installation to ensure it operates at the correct outlet temperature.
Prior to commissioning the thermostatic mixing valve check the following:

- The designation of the thermostatic mixing valve matches the application.
- The supply pressures are within the valves operating range.
- The supply temperatures are within the valves operating range.
- Isolating valves (and strainers preferred) are installed.

Fig1:

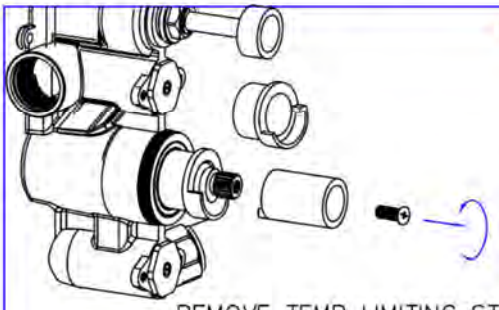

REMOVE TEMP LIMITING STOP

Fig2:

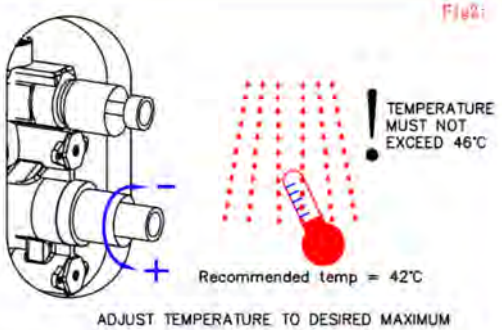

ADJUST TEMPERATURE TO DESIRED MAXIMUM

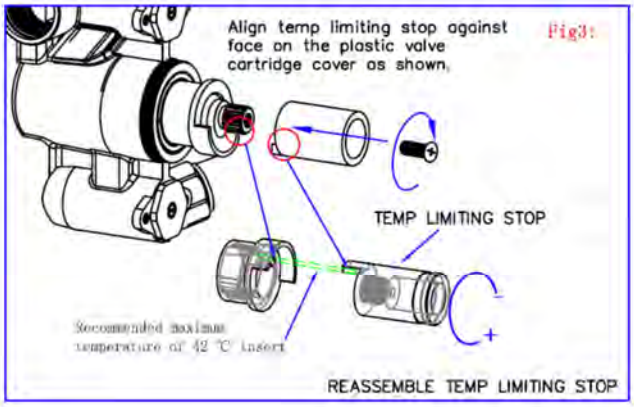

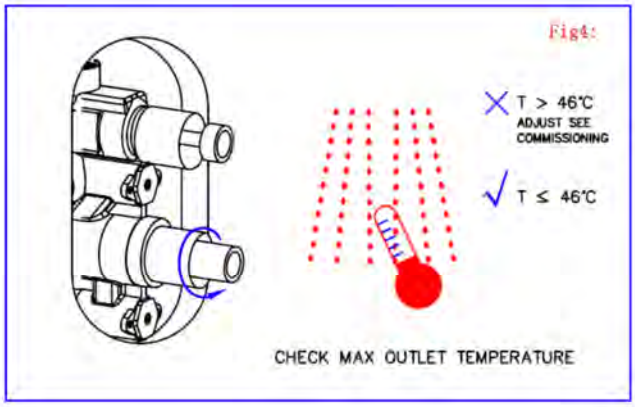

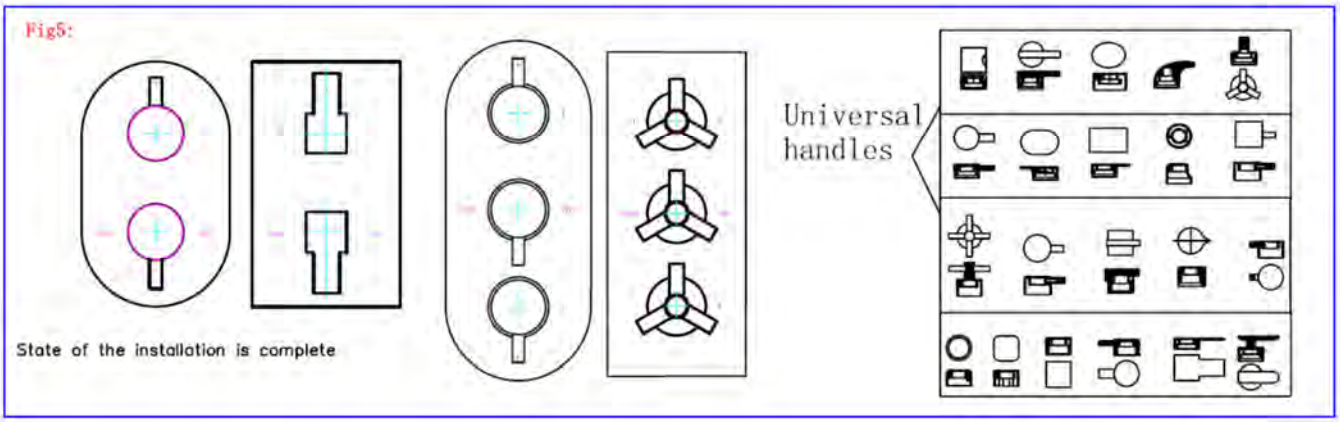

The information contained on this page was correct at the date of issue. Fitting dimensions are provided as a guide only. Some variation may occur due to manufacturing tolerances. We pursue a policy of continuing improvement in design and performance of our products and so reserve the right to change specifications without prior notice

FOR FURTHER ADVICE PLEASE CONTACT :-
SAGITTARIUS LTD UNIT 1 LOWER VICTORIA STREET—CHADDERTON—OLDHAM—OL9 9TU TEL:0616 6202029
EMAIL:TECHNICAL@SAGITTARIUSTAPS.CO.UK