SAGITTARIUS

TAPS & SHOWERING

Construction	Brass Body, Brass Handle
Finish	Chrome
Style	Traditional
Working pressure	Min 0.2 bar, max 5.0bar
Plumbing systems	Suitable for all plumbing systems
Connection inlet	15mm female compression
Cartridge	Brass
Guarantee	10years on chrome finish, 3 years serviceable parts
	WRAS & TMV3 approved.

Ergo Exposed Dual Control Thermo Valve Chrome EL/573 & EL/574





WRAS APPROVED PRODUCT

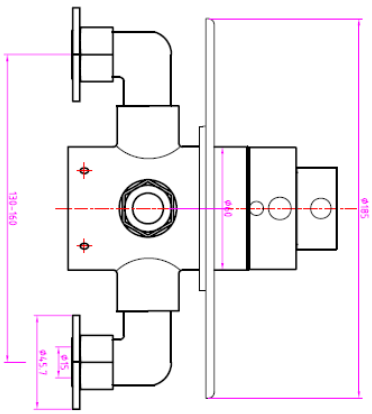

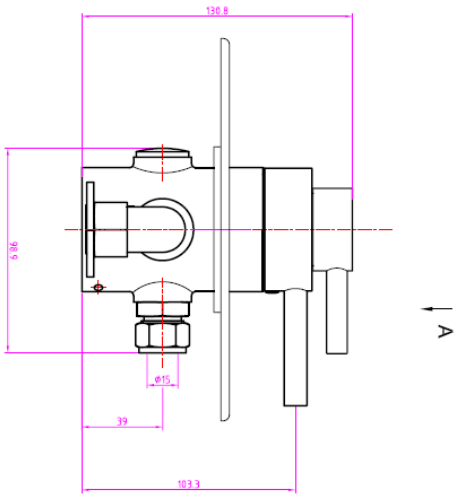

TROUBLE SHOOTING

Fluctuating temperature:

- Hot and cold feeds plumbed in the wrong way
- Hot and cold feed pressures are unequal
- Shower check valve sticking-blocked
- Mesh filters (located in elbows) blocked

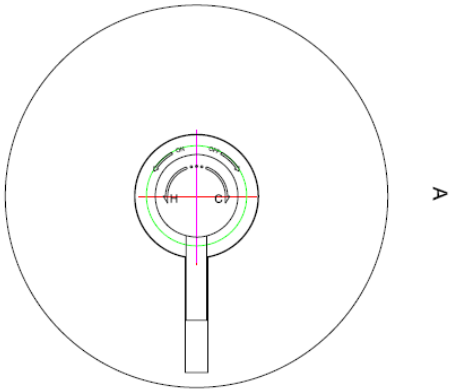

Flow Rates (litres per minute)

System Pressure	0.2	0.3	0.5	1bar	1.5	2	3	5
	3.4		5.7	12.4		19.6		

The information contained on this page was correct at the date of issue. Fitting dimensions are provided as a guide only. Some variation may occur due to manufacturing tolerances. We pursue a policy of continuing improvement in design and performance of our products and so reserve the right to change specifications without prior notice

FOR FURTHER ADVICE PLEASE CONTACT :-
SAGITTARIUS LTD UNIT 1 LOWER VICTORIA STREET—CHADDERTON—OLDHAM—OL9 9TU TEL:0616 6202029
EMAIL:TECHNICAL@SAGITTARIUSTAPS.CO.UK

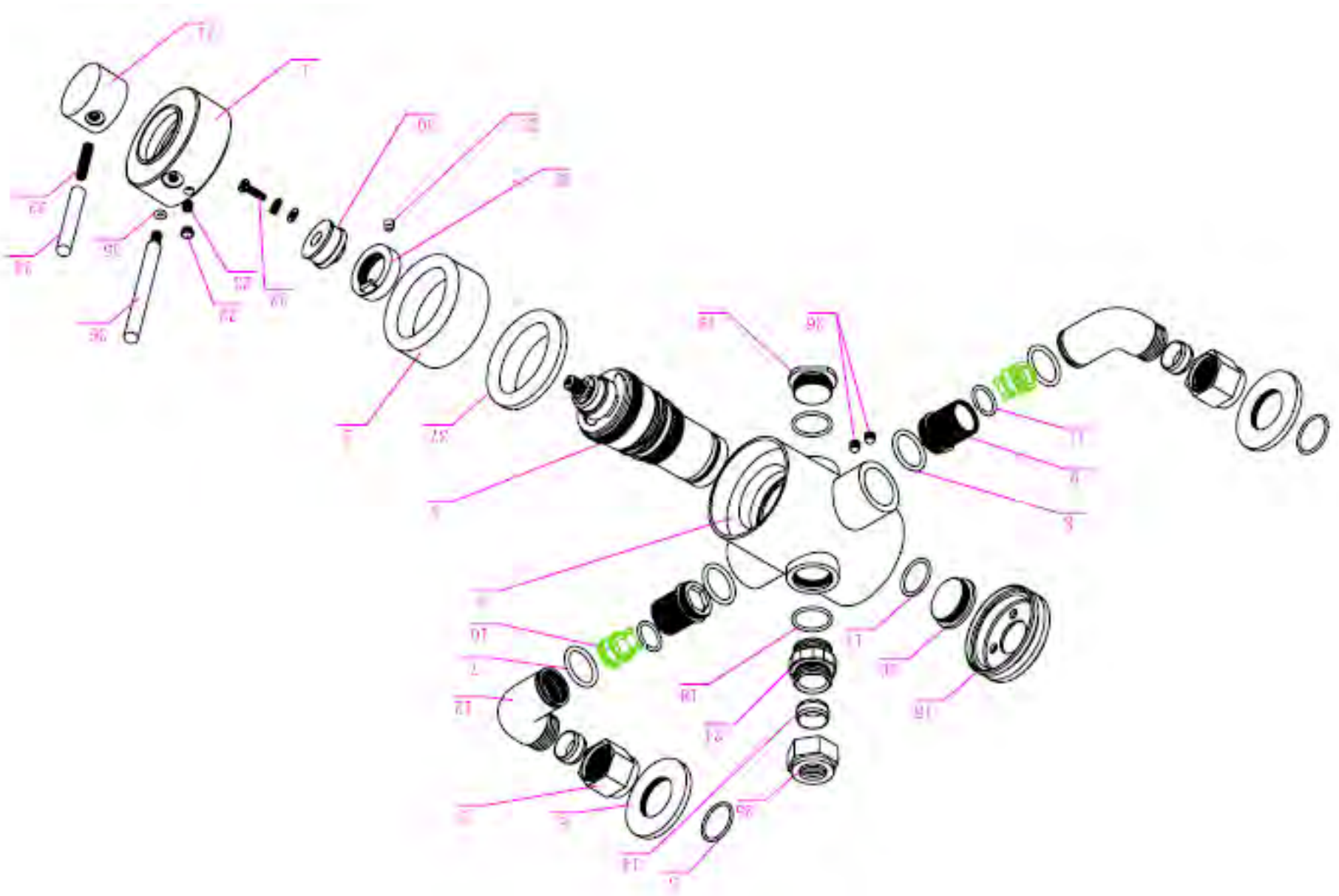

OUTLET CHANGE

Changing bottom outlet to a top outlet.
The valve is received with the outlet at the bottom for hose connection. If you require an outlet at the top, as shown in the figure here below, you will need to change the outlet position.
To do this follow the steps below.

1. Unscrew bottom outlet from valve, using a spanner.
2. Unscrew the top outlet plug from the valve using a spanner.
3. Fit plug into the hole at the bottom of the valve and tighten.
4. Insert the outlet into the top of the valve and tighten.
5. Fit riser pipe and check for leaks.

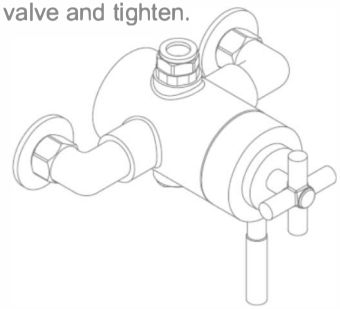

IMPORTANT
DO NO SIMPLY TURN THE VALVE OVER TO CHANGE THE OUTLET POSITION

AFTERCARE INSTRUCTIONS

Whilst modern plating techniques are used in the manufacture of this item, the surfaces will wear if not cleaned correctly. Some household bleaches and abrasive cleaners can damage chrome finishes and if splashed onto a fitting should be immediately washed off with cold water.

Clean this product with a soft cloth and clean water, the use of any abrasive material will invalidate the guarantee.

NOTE

We have a policy of continuous improvement and reserve the right to change specifications without notice.

Sagittarius Limited
Unit 1, Lower Victoria Street
Chadderton
Oldham
OL9 9TU

Tel：0161 620 2029
Fax：0161 628 7102
Email：sales@sagittariustaps.co.uk
www.sagittariustaps.co.uk

SAGITTARIUS LTD.

Exposed/Concealed shower valve

Installation and Maintenance Instructions

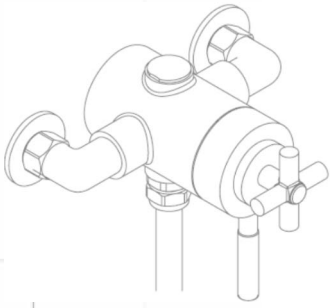



IMPORTANT

This product must be fitted in accordance with water bylaw regulations.
Please retain this instruction leaflet for future reference to ensure optimum shower mixer perfomance.

CARTRIDGE CHANGE AND CLEANING CONTENTS

Through years of use impurities and limescale can restrict the flow of water through the mixer. If the mixers performance deteriorates the mixer cartridge may need to be cleaned or replaced. The following procedure explains how to remove and clean the cartridge.

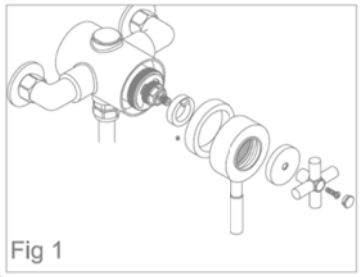

Fig 1

1. Shut down all water supply to the mixer.

2. Remove the cap on the regulator handle. Undo screw and pull the handle from the mixer body. Remove the indice from the flow control handle and undo the grub screw. Remove the flow control handle from its spline. Undo screwand pull the stopper from the mixer body.Fig 1.

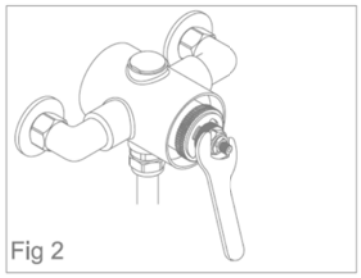

Fig 2

3. Unscrew the cartridge with a 17mm spanner Fig.2.Remove the cartridge from mixer being careful Page 9 not to damage the seals. Fig.3.

4. Wash the cartridge under running water or leave to soak in vinegar or de-scaling agent.

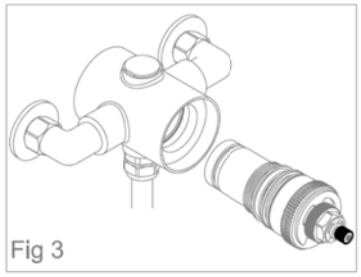

Fig 3

5. Before refitting the cartridge, clean the mixer Fig 2 housing and grease the cartridge o-rings.

6. Re-fit the cartridge and tighten with a 17mm spanner (torque 15-20 Nm).

7. Turn the water supply back on. Measure water temperature with a thermometer. Turn the regulator handle to the maximum hot position, remove the handle then using a screwdriver (see Troubleshooting part) set the mixed flow temperature more than 41° C.

8. Re-fit the flow control handle and fix it by means of the grub screw; pay attention that the lever is directed downwards(see REFITTING HANDLES). Then re-fit the regulator handle and fix it by means of the screw(see TEMPERATURE SETTING).

CONTENTS

Page 2	Introduction
Page 3	Technical Details
Page 4-5	Installation
Page 6	Temperature setting
Page 7	Refitting handles
Page 8	Cartridge Change and Cleaning
Page 9	Troubleshooting
Back Page	Outlet Change Aftercare Instruction

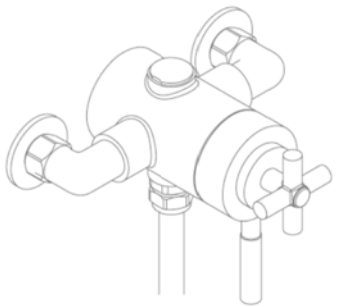



INTRODUCTION

Please read these instructions carefully and keep in a safe place for future reference.

General Installation Requirements

Maximum cold supply: 25°
Maximum hot supply: 80° C
Minimum hot supply: 10° C higher than maximum required mixer temperature
Advisable hot supply: 55-65° C
Minimum difference between hot and mixed temperature: 10° C
Mixed water: 41°

The installation must comply with regulations of the Local Water Authority as contained in their bylaws. All of the taps in this range are single flow (the hot and cold water mix in the body) and should therefore be supplied with hot and cold water at balanced pressures,both from the tank or both from the mains (via a combination boiler for example). If the taps are not supplied at balanced pressures then the mixer will not function correctly. It will also be necessary to fit non-return valves on both hot and cold feeds. It is very important that all pipe work is flushed thoroughly after installation to avoid damaging the ceramic discs.

Minimum/Maximum working pressure

These taps are suitable for high and low pressure installations. They are fitted with a ceramic disc cartridge which provides a good flow rate with very smooth movement. To ensure that the mixer works adequately under low pressure, the cold water storage tank should be at least 2 metres above the highest installed position. The maximum water pressure is 10 bar (note: mains cold water is normally supplied at between 2 and 3 bar).For installations when the mains pressure exceeds 5 bar a pressure reducing valve shouldbe fitted.

Approvals

All products are manufactured using materials tested and approved under the Water Bylaws Scheme and comply with requirements of British Standard 5412: 1996 where applicable.

Preparation and bylaw requirements

These taps are single flow so the hot and cold water mix in the body. Water bylaws require that where the hot water is supplied from a tank and cold from the mains, non return valves are fitted on both hot and cold pipes as close as possible to the tap. These are not supplied. Where combination boilersare fitted it is only necessary to shut off the incoming mains and turn the boiler off, non return valves are not required.

WARNING

Before installing the new mixer it is essential that you thoroughly flush through the supply pipes in order to remove any remaining swarf, solder or other impurities. Failure to carry out this simple procedure could cause problems or damage to the workings of the mixer.

These hints have been prepared for your guidance, you must exercise due care at all times.

We do not accept responsibility for any problems that may occur through incorrect installation.

REFITTING HANDLES

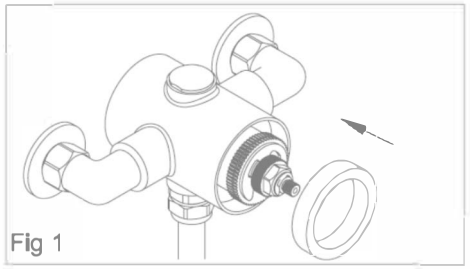
Fig 1

Wash the body with chean running water. Put the washer on the body as far as it will go.See Fig 1.

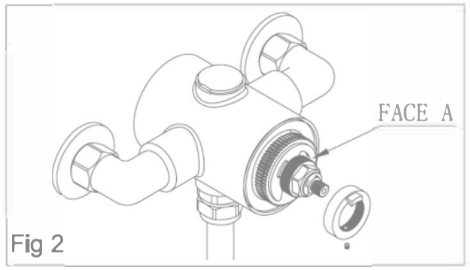

Fig 2

Fit the temperature control ring over FACE A on the front of the cartridge,Refit and tighten the screw. See Fig 2.

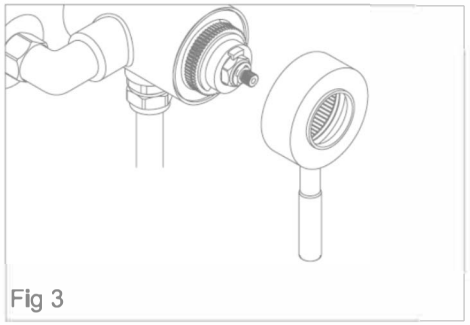
Fig 3

Turn on water supply. Place flow control handle over large spline and slowly turn clockwise until water flow stops. then remove handle and don't turn the cartridge. See Fig 3.

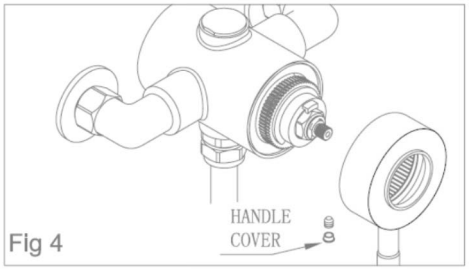

Fig 4

Without rotating, position the flow control handle over the large spline. Tighten the screw on to the splines and fit handle cover. Refit the temperature control handle and cover.See Fig 4.

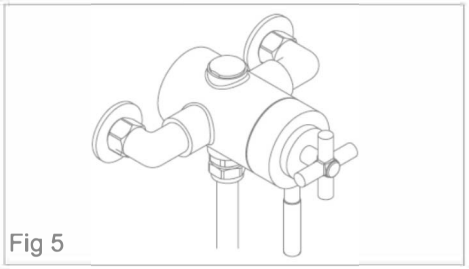
Fig 5

Last, as shown in paragraph "TEMPERATURE SETTING" to refit the temperature control handle. See Fig 5.

TEMPERATURE SETTING

The control handles on this product are factory set and should require no adjustment. However,if for any reason the handles and/or the mixing cartridge is removed it is important to employ the following procedure to ensure trouble-free use.

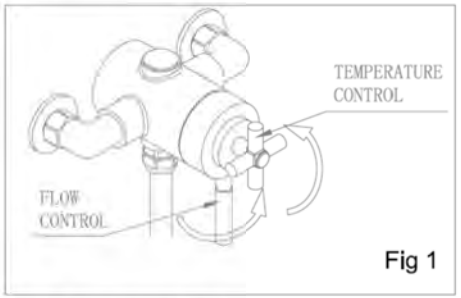

Fig 1

Turn flow control anti-clockwise to maximum flow position, and temperature control anticlockwise until it contacts the internal limit stop.See Fig 1.
Allow water temperature to stabilise (about 3 minutes) and check temperature. Proceed if temperature is HOT 41℃.

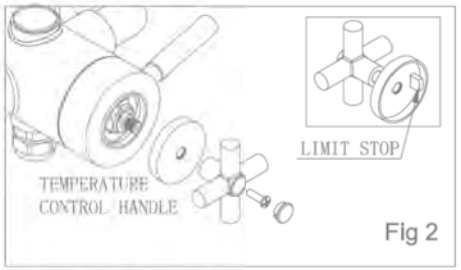

Fig 2

Shut off the water flow. Unscrew the decorative cover on the temperature control handle.Unscrew and remove the handle retaining screw and keep in a safe place. Pull off the handle and note the position of the internal limit stop.See Fig 2.

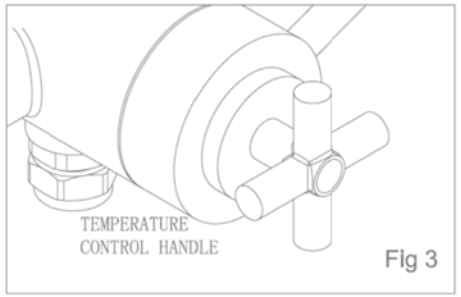

Fig 3

Temporarily refit the temperature control handle until it just engages on the splines of the spindle. Turn on the water.Slowly turn the handle in the requireddirection until the discharge temperature is achieved. Remove the handle when finished.See Fig 3.

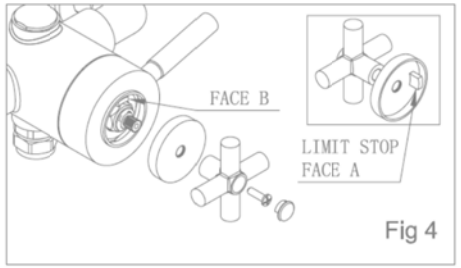

Fig 4

Without rotating the temperature spindle, replace the handle so that Face A is directly adjacent to Face B. Refit and tighten the screw. Refit the decorative handle cover. See Fig 4.

TECHNICAL DETAILS Dimensions in mm

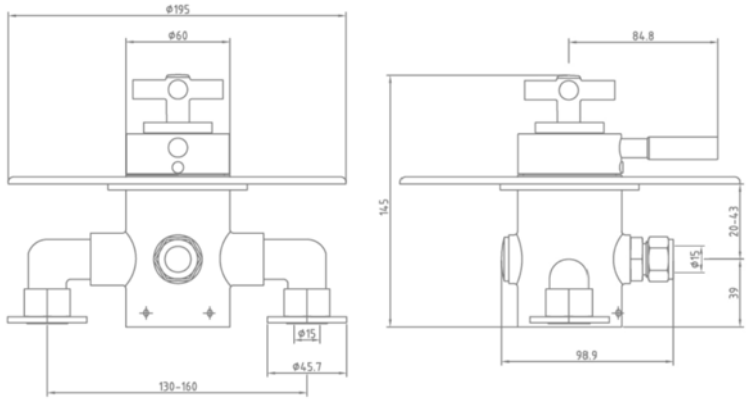

Breakdown of parts

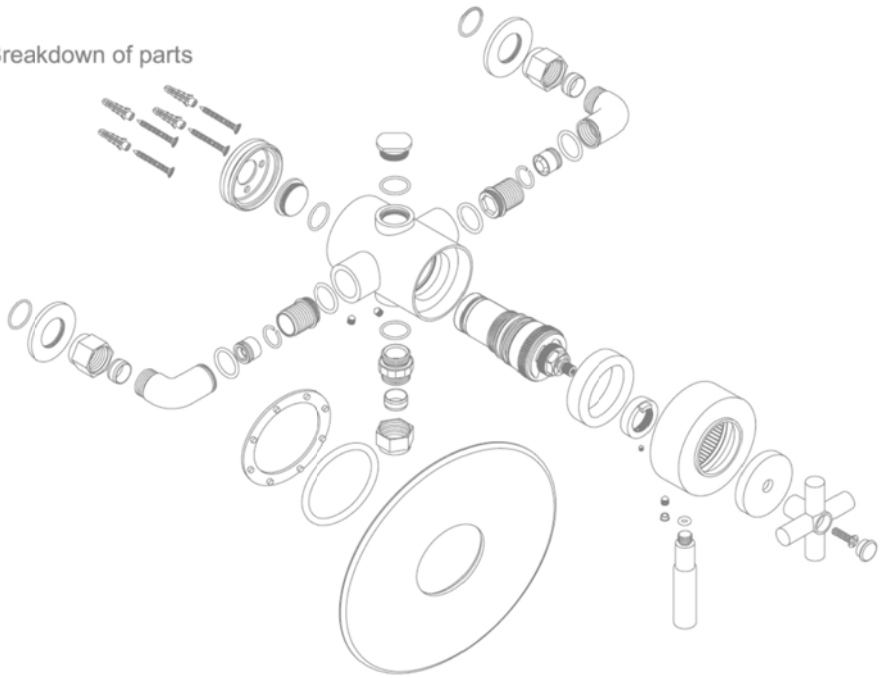

Other Information

The mixer inlets are supplied with ."BSP threads.
The valve is provided with two outlets (top and bottom).

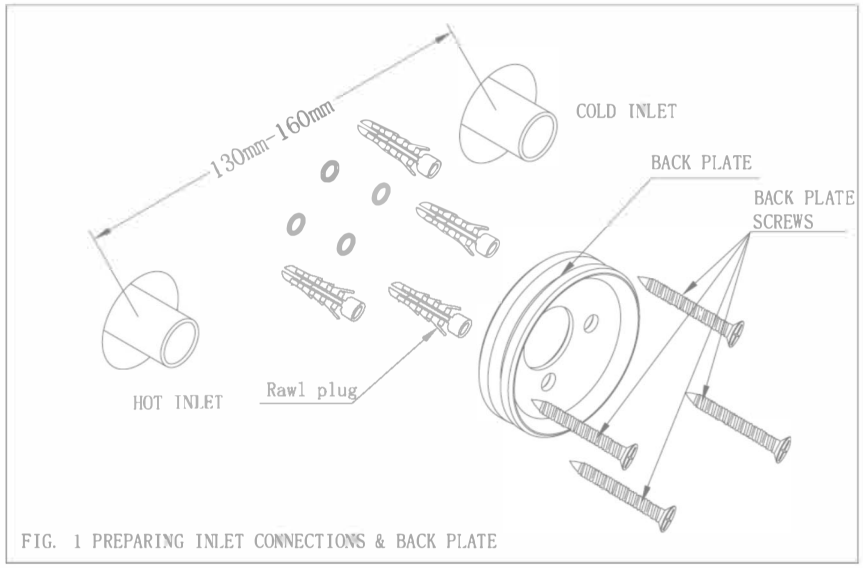

FIG. 1 PREPARING INLET CONNECTIONS & BACK PLATE

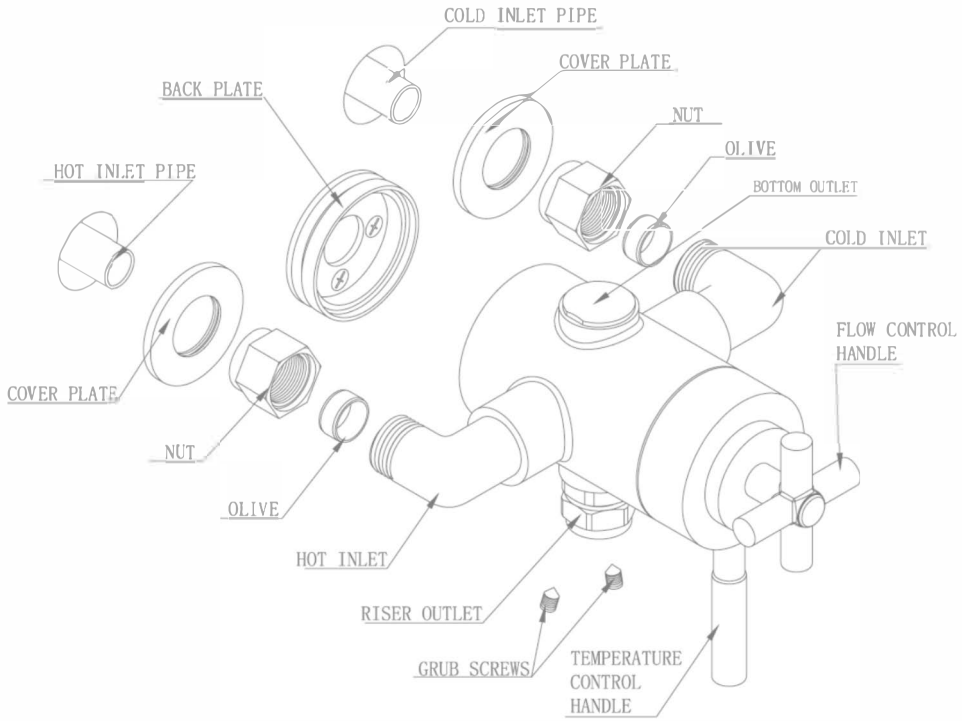

INSTALLATION

First shut off your water heating system, then with your mains stop cock closed. Open the lowest hot and cold taps in the house and allow to run until the cold storage tank and pipesare empty (the hot water storage cylinder always remains full).
When combination boilers are fitted it is only necessary to turn off the boiler and shut off the incoming mains.
Fitting isolating valves to the inlet feeds is recommended for ease of maintenance.

INSTALLATION

⚠ Remember to turn off the mains water supply before connecting to any existing pipe work.
⚠ Warning! Please check for any hidden pipes and cables before drilling holes in the wall.

Preparation.
Prepare the supply pipes (hot on the left and cold on the right) at the required height with a width of 150mm centres, making the ends of the pipes 15mm out from the face of the wall,see fig 1.
Remove the nuts and olives and place the valve over pipes, mark the position of the back plate and remove. Remove the back plate from the valve by loosening the grub screw underneath, position the back plate onto the wall with the grub screw at the bottom and mark the position of the 4 holes. Drill the 4 x 6mm holes to a depth of 40mm and insert the wallplugs. Fix the back plate to the wall with the supplied screws
Valve.
Slide the cover plates onto the nuts and position on each pipe with the cover plate againstthe wall, slide an olive onto each pipe. Push the valve over each pipe and into the back plate,
tighten the 2 nuts onto hot and cold inlet, and then the grub screw underneath the valve.
Finally connect the valve and the riser.
Note: There is the option to fit the valve as described and then move the stopper from bottom outlet to the top. This will allow for a flexible hose to be used.
Having first checked all new connections, turn on the mains stop cock, close all taps except the new valves and as the system starts to refill check for leaks.
Once you have satisfied with yourself that there are no leaks, switch on the water heating.

OPERATION

Turn the Flow control handle to TURN ON and OFF and to increase/decrease the flow of water.
Turn the Temperature control handle to increase/decrease the temperature.
To change the set temperature read section on page 5 Temperature setting.

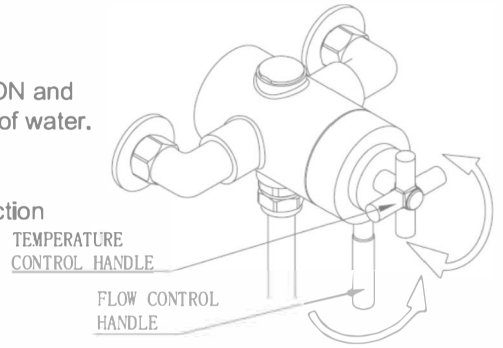

TROUBLESHOOTING

1. CONTINUOS TEMPERATURE OSCILLATIONS

Cause: The mixer has been installed with inverted inlets.

Solution: The hot water inlet (see red dot on the rear of the mixer) must always be on the left hand side of the mixer.

2. POOR MIXER OPERATION

Cause: Dirty or damaged cartridge or Hot and cold supplies are plumbed the wrong way round.

Solution: Refer to 'CARTRIDGE CHANGE AND CLEANING' on page 8 or Check hot and cold feeds.

3. COLD WATE INTO THE HOT WATER SYSTEM.

Cause: Damaged check valves.

Solution: Check and clean the check valves.

4. LOW FLOW RATE OF WATER

Cause: Faulty cartridge or the valve will shut dowm if either the hot or cold supply fails .

Solution:Refer to 'CARTRIDGE CHANGE AND CLEANING' on page 8 or Check hot and cold feeds.

5. WRONG CARTRIDGE SETTINGS

Cause: Preset settings are unsuitable for installation.

Solution: the mixer is factory preset at 0.6 bar and at a temperarure of 55-65 ° C for hot water and 10-15 ° C for cold corresponding to a mixed temperature of 41 ° C. Domestic installation temperature and inlet pressures can vary which will require the mixer to be adjusted.

1. Use a common household thermometer to test water temperature.
2. Turn the handle until fully hot.
3. Prise off cap and undo screw on regulator handle (handles can remain during this process).
4. Insert a thin bladed screw driver inside the splinde of the cartridge to engage with the slot inside, then turn until desired temperature is reached, always maintain a min10c difference between set temperature and hot water system temperature.
5. In case you have removed handles, refit them with knobs on the top.
6. Re-fit screw & cap see page6.

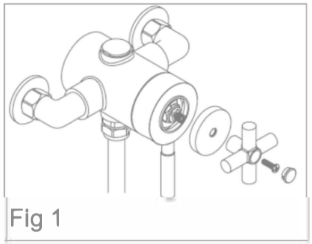

Fig 1

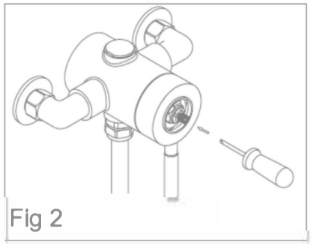

Fig 2

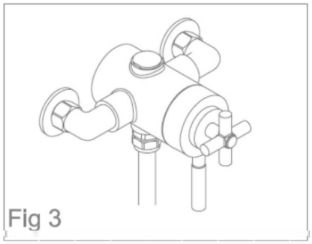

Fig 3