SAGITTARIUS

TAPS & SHOWERING

PLAZA PAIR OF WALL MOUNTED SIDE VALVES CHROME

PL/142/C

Construction	Brass Body CuZn40Pb2, EN CW617N (equivalent to BS CZ122) Zinc alloy Handle
Finishes	Chrome : Ni : 8-12um, Cr : 0.25-0.3um
Product Type	Contemporary
Water Pressure	Min. 0.2 bar, Max. 6.0 bar
Plumbing Systems	Suitable for all plumbing systems
Standards	Complies with BS5412, BS EN200
Certification	-
Cartridge	¼ turn ¾" ceramic disc valve
Diverter	Ceramic disc
Aerator	Neoperl Aerator
Fitting	¾" BSP
Packaging	
Guarantee	10 years against manufacturing faults (excluding serviceable parts)
Additional Information	



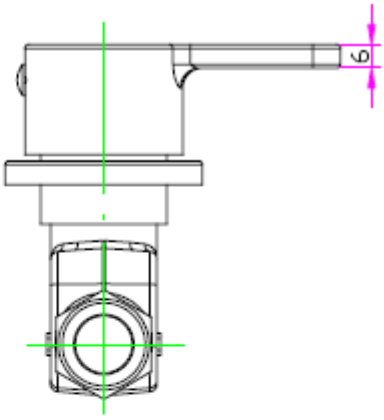

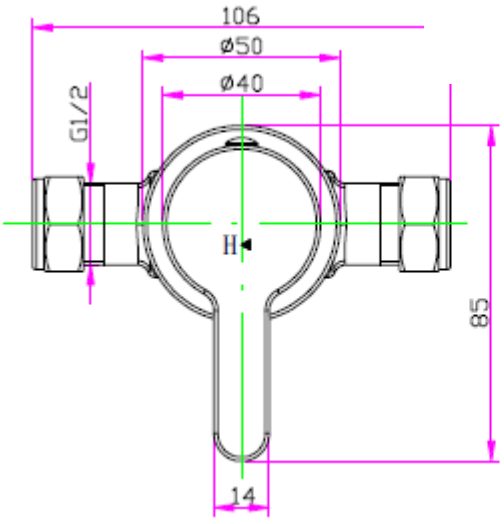

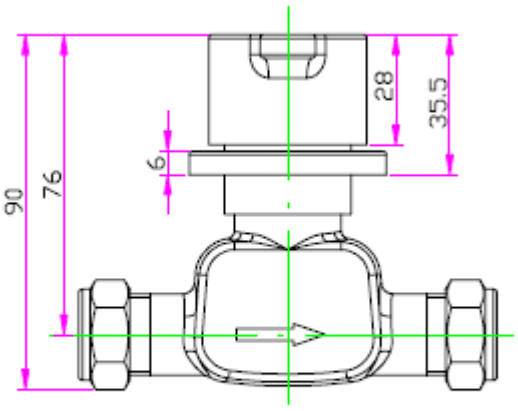

The information contained on this page was correct at the date of issue. Fitting dimensions are provided as a guide only. Some variation may occur due to manufacturing tolerances. We pursue a policy of continuing improvement in design and performance of our products and so reserve the right to change specifications without prior notice

FOR FURTHER ADVICE PLEASE CONTACT :-
SAGITTARIUS LTD UNIT 1 LOWER VICTORIA STREET—CHADDERTON—OLDHAM—OL9 9TU TEL:0616 6202029
EMAIL:TECHNICAL@SAGITTARIUSTAPS.CO.UK