AFTER CARE:

To maintain the appearance of this tap, ensure that it is regularly cleaned only using a clean, soft damp cloth. A solution of warm water and a mild liquid detergent may be used where necessary, and then the fitting rinsed thoroughly and wiped dry. Abrasive cleaners, scouring cleaners and acid cleaners **must not be used** under any circumstances. All bath cleaning powders and liquinds will damage the surface of your fitting even the non-scratch cleaners.
Avoid contact with all solvents and any harsh household chemicals. You will damage the plated finish and void your guarantee.

GUARANTEE AND LIABILITY

In the unlikely event that you should experience any defect in the material or workmanship of your mixer tap within 5 years of purchase, we will replace the faulty part free of charge. Decorative surface finishes are guaranteed for 1 year from the date of purchase provided that our advise concerning care has been observed and no scouring agents have been used. This is provided that the mixer or tap has been used for normal domestic purposes in the UK and that the care, installation and maintenance instructions have been observed.
Scuff and scratches caused by normal wear and tear, improper installation or accidental damage are excluded from this guarantee.
You should retain a copy of your dated invoice as proof of purchase to validate any claims under this guarantee.
No other warranties, express or implied, are made, including merchantability or fitness for a particular purpose.

SPARE PARTS AND SERVICE

Contact	STERLING
Phone	01684 299555
Fax	01684 290958
e-mail	sales@sterling.eu.com
web-site	www.sterling.eu.com

clearwater

COTTAGE BRIDGE

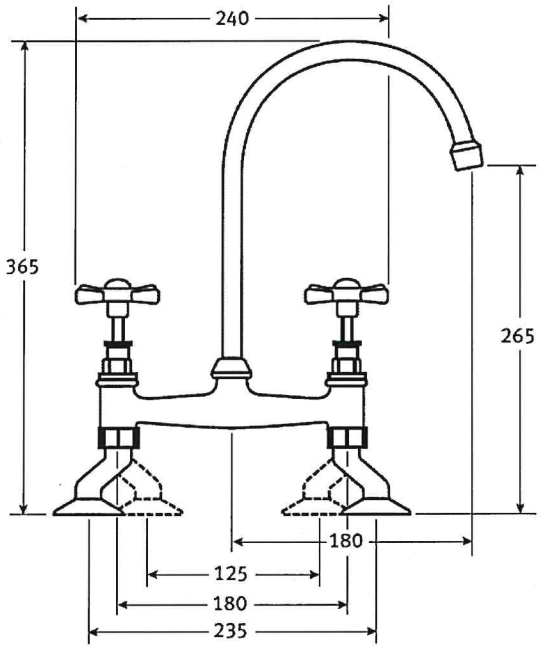

Fitting Instructions & Contents List

Please keep these instructions for future reference and request of replacement parts.

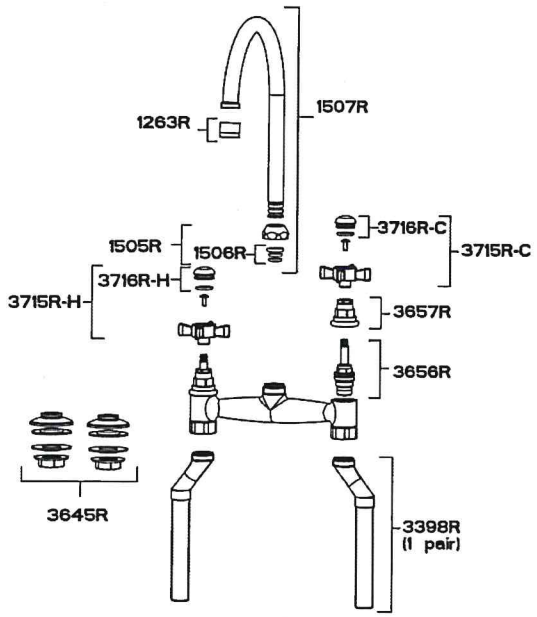

CODE	DESCRIPTION
1263R+color	Antisplash
1507R+color	Spout
1505R+color	Fixing nut+o.ring
1506R	O.-ring kit
3715R+H (Hot) / C (Cold)+color	Handle
3716R+H (Hot) / C (Cold)	Indices
3657R+color	Valve cover
3656R+color	Valve
3398R+color	Legs (1 pair)
3645R+color	Fixing kit

In the unlikely event you find a part missing please contact our Customer Service Help line on 01684-299555 for immediate dispatch of part.

Maintenance:

If the fitting begins to drip:
1) Turn off the water supply
2) Loosen grub screw under handle lever and remove handle. Unscrew shroud and valve
3) Carefully clean seating, rubber washer and ceramic disc.
4) Replace valve and handle, then turn on the water supply.
5) If problem persist contact our help line quoting the product code.

Where an aerator is fitted to the outlet of the spout, it will need occasional cleaning. This will be evident when the water flow slows down to an unacceptable level. To accomplish this unscrew the outlet in an anti-clockwise direction and remove the mesh. Immerse the mesh in a suitable descaling fluid overnight, rinse thoroughly in clean water and re-install.

Remember:

Maximum water supply pressure: 75 PSI (5 bar)
Maximum hot-water supply temperature: 70 °C
Recommended hot-water supply temperature: 65 °C

If these temperatures or water pressure are exceeded damage to the tap can result. A pressure reducing valve may be required to be fitted in high water pressure situations.

Please read these instructions before you install and use the tap. All designs, descriptions and dimensions are subject to change without notice.

Preparation

Flush the plumbing system before installing the mixer tap. This is to avoid plumbing residues clogging the mesh of the aerated outlet, or possibly damaging the valve's washers. This is especially important where extensive plumbing work has been carried out.
First shut off your water heating system then, with your mains stop cock closed, open the lowest hot and cold taps in the house and allow to run until the cold storage tank and pipes are empty. (The hot water storage cylinder always remains full).

Installation

- Having attached angled pillars using the rubber washers, place sink mixer in position to see if any alteration to the existing supply pipework is necessary. Fully hand tighten the nuts.

- After making any necessary alterations to the pipework, check that the mixer body is correctly positioned. Hot water should be connected to the left when viewed from the front.

- Tightening the nut between legs and body, ensure that the washer (supplied) is in place and nuts are fully tightened to avoid leaks. Also, prevent scuffing by protecting the nut with a soft cloth when tightening with a spanner.

- Pass the rosette and rubber washer over each leg. Put the tap in position, forming a seal on the sink or worktop.

- Pass the other rubber washer and plastic nut over each leg and fully tighten