KETTLE

HotShot 1 Instant Hot Water Appliance v7

clearwater
THE CLEAR CHOICE





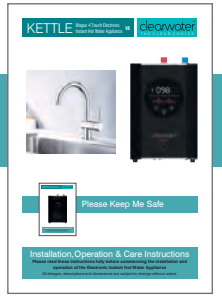

Please Keep Me Safe

Installation, Operation & Care Instructions

Please read these instructions fully before commencing the installation and operation of the Electronic Instant Hot Water Appliance

All designs, descriptions and dimensions are subject to change without notice.

GUARANTEE AND LIABILITY

In the unlikely event that you should experience any defect in the material or workmanship of your mixer tap or tank within 5 years (tap) and 2 years (kettle tank) from date of purchase, we will replace the faulty part free of charge.

The Clearwater Kettle water filter must be replaced every 6 months regardless of the filter icon postion. Failure to do so will invalidate your product warranty. Only use genuine Clearwater kettle filters.

Decorative surface finishes are guaranteed for one year from the date of purchase provided that our advise concerning care has been observed and no scouring agents have been used. This is provided that the mixer or tap has been used for normal domestic purposes in the UK and that the care, installation and maintenance instructions have been observed.

Scuff and scratches caused by normal wear and tear, improper installation or accidental damage are excluded from this guarantee.

You should retain a copy of your dated invoice as proof of purchase to validate any claims under this guarantee.

No other warranties, express or implied, are made, including merchantability or fitness for a particular purpose.

Register your warranty:
Fill in your free post form or register your tap/tank by scanning the QR

Need Help Scan me

SCAN ME

AFTER CARE

To maintain the appearance of this tap, ensure that it is regularly cleaned using only a clean, soft damp cloth. A solution of warm water and a mild liquid detergent may be used where necessary, and then the fitting rinsed thoroughly and wiped dry. Abrasive cleaners, scouring cleaners and acid cleaners **must not be** used under any circumstances. All bath cleaning powders and liquids will damage the surface of your fitting even the non-scratch cleaners.

Avoid contact with all solvents and any harsh household chemicals. You will damage the plated finish and void your guarantee.

Spare Parts & Service

sterling
SINKS & TAPS

Phone: **01684 299555**
Email: **orders@sterling.eu.com**
Website: **www.sterling.eu.com**

PARTS LIST
HOTSHOT 1
Ref. HOT1

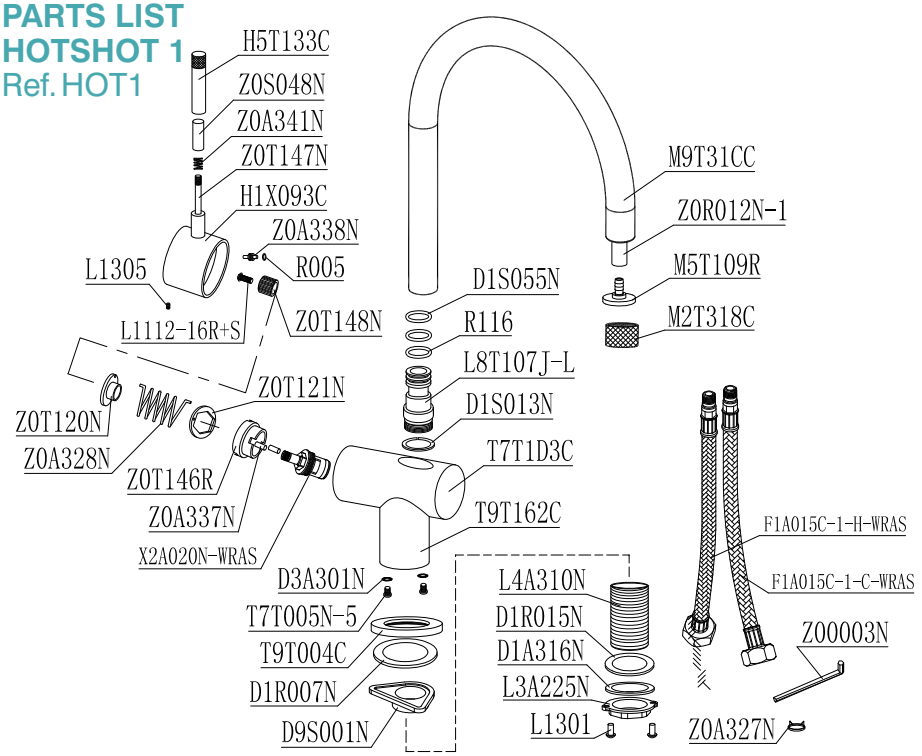

In the unlikely event you find a part missing please contact our Customer Service Helpline on 01684 299555 for immediate despatch of part.

OPERATING INSTRUCTIONS

How to use your Hotshot Tap:

(i) For Instant Filtered kettle Water depress the handle on right hand side of the tap and rotate backwards.

WATER PRESSURE

Minimum supply pressure for cold water is **1.5 bar -** Maximum supply pressure **5 bar** (although we only recommend a maximum supply pressure of **2.5 bar**).

If these temperatures or water pressure are exceeded, damage to the tap can result. A pressure reducing valve may be required to be fitted in high water pressure situations.

Regulations and Requirements:

It is important to ensure that the water supplies to your tap, is connected in accordance with the water regulation requirements,plumbing code and good plumbing practice. Water Supplies should be from a common source, either mains or tank fed.

INSTALLATION

Congratulations on the purchase of your new Hotshot Kettle Tap. When correctly installed and maintained with care, this tap should give you many years of trouble free service. Please read and fully understand all installation instructions before starting to install and use this appliance. If in doubt contact a qualified plumber or retailer to assist. Please ensure that the recommended Clearwater kettle tank is used with this tap. Do not plug in the kettle Tank until all water connections have been made and checked for being watertight and Kettle Tank must be filled with water. The kettle Tank is filled once water starts to pass out of the tap spout. It is recommended before using the tank to flush through several litres of water to remove any air in the system when installing. Please note that in order to avoid having pressurised boiling water and to comply with UK Byelaws, this is an open vented system. In order to ensure the kettle tank continues to deliver the highest quality drinking water and is protected from lime scale build-up the Clearwater kettle water filter **must be replaced every 6 months**, failure to do so will invalidate your product warranty.

Only use genuine Clearwater kettle filters.

Avoid kinking tubes during installation as this could restrict flow and cause malfunctioning of the appliance. Do not use pipe sealing compounds on any connections. These can foul the internal mechanics and may cause objectionable taste and odour.

Plumbing connections must comply with all sanitary, safety and plumbing standards.

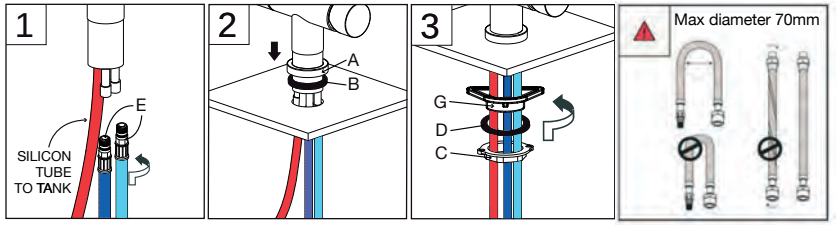

A) Base Ring
B) Tap Base Seal
C) Locking Nut
D) Seal
E) Cold Flexi Tails
F) Silicon Hose
G) Tap Stabilising Ring

(i) The tap needs a Ø 35mm diameter hole to install into sink or worktop.

(ii) Feed the flexible connections through the work surface hole Ø 35mm, ensuring the base seal is in place between tap and mounting surface.

(iii) Ensure the tap is orientated correctly i.e. the spout fixing screw should be at the back. The hot water lever should rotate to point backwards.

(iv) Secure the tap in position using the locking nut.

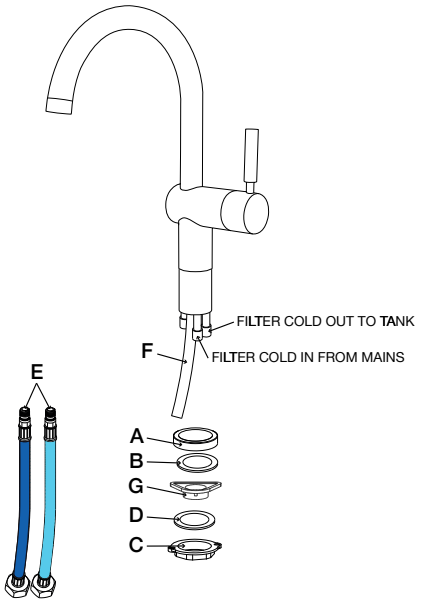

WHAT YOU NEED TO KNOW BEFORE YOU START

For your safety and satisfaction please read all the instructions, cautions and warnings before installing or using this electronic instant hot water appliance.

This electronic instant hot water appliance is not intended for commercial use.

IMPORTANT NOTICE: This product can cause harm if installed incorrectly and should only be installed by a competent person, if you feel for any reason unsure about the installation please contact a qualified plumber or electrician to install the appliance.

Make sure all electrical wiring and connections conform to local standards.

Make sure all water connections conform to local standards.

A standard 220/240v grounded 13 amp switched electrical outlet is required under the sink for the electronic instant hot water appliance electrical power and must supply electrical power continuously to the appliance.

The power outlet must be connected to the 13 amp fused plug supplied.

EQUIPMENT REQUIRED



Tape Measure | Safety Glasses | Adjustable Wrench | Screw Driver | Pliers

NOTICE

The electronic instant hot water appliance like any water heater has a limited operational life span. In order to ensure maximum protection and to avoid possible damage to any property or personal injury the electronic instant hot water appliance should be inspected regularly for any water leakage or damage.

Regularly check for any signs of water leakage, if there is any water leakage then isolate supplies and contact Sterling.

Electric Shock: Using an ungrounded connection or improper connection of the power supply to the product can result in a serious injury or death from electrical shock.

Electric Shock: Do not remove the earthing terminal.
Do not reconstruct the plug.
Do not disassemble main box and any part for the power.

WARNING
DANGER

COMPONENTS PLAN

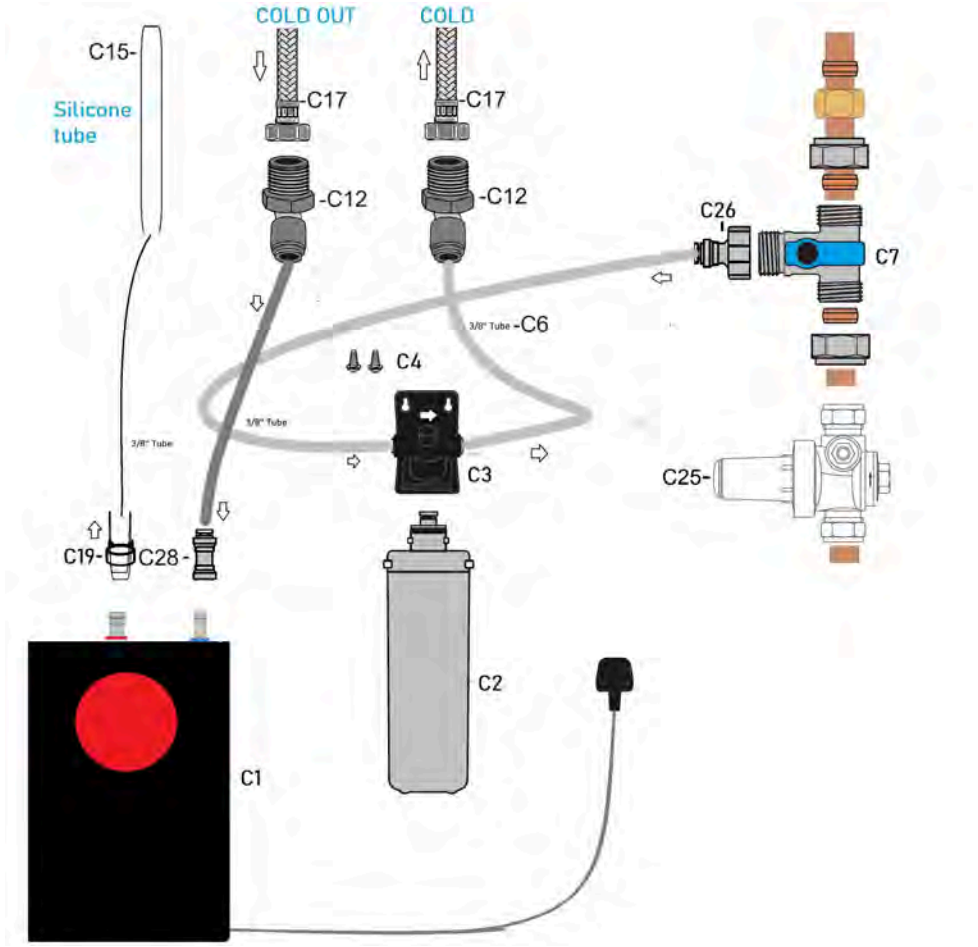

REF CODE	DESCRIPTION	QTY
C1 CWT124	Kettle Tank	1
C2 F6C1	Kettle Filter	1
C3 FC1H	Kettle Filter Head	1
C4 PZSC	Pozi Screws	2
C6 ZOSO11N	3/8" Tubing	1
C12 PI051624S	1/2" BSP M x 3/8" Push	2

REF CODE	DESCRIPTION	QTY
C17 F1A015C-2-C-WRAS	Inlet hose M8 x 1/2"	2
C19-Z0A327N	Silicone tube clip	1
C25 RE1212C	Pressure reducing	1
C28 P1438	3/8" x 3/8" PushFit Straight	1
C15 Z0R012N-1	Silicone Tubing	1
C7 27906	3 way tee with isolation ½"	1
C26 P38F12C	1/2" x 3/8" Push	1

IMPORTANT SAFETY INSTRUCTIONS

PLEASE READ ALL INSTRUCTIONS CAREFULLY



When using all electrical appliances, basic safety precautions should always be followed including the information below:

To protect against electrical shock, do not place cord, plugs or unit near or in water or other liquids and do not operate the electronic instant hot water appliance controls or power socket with wet hands.

Check the power rating of your electronic instant hot water appliance is suitable for the power rating of the electrical circuit it is being installed on.

Do not operate or install the electronic instant hot water appliance if it appears to have any missing parts, be damaged/faulty eg damaged cord, plug.

Do not use outdoors or in a damp area.

Do not use the electronic instant hot water appliance for anything other than the intended Domestic use.

The electronic instant hot water appliance must be installed vertically as shown on front cover with inlet and outlet connections at the top of appliance.

Ensure the front of the unit is visible and the front temperature dial can be easily reached.

Do not attempt to open, modify or service this electronic instant hot water appliance. Repairs should be carried out by Authorised Service personnel. Opening the unit will void the guarantee.

In areas of high water pressure above 5 bar a pressure reducing valve must be fitted or the electronic instant hot water appliance guarantee will be void.

Turn off all controls before unplugging.

Do not unplug by pulling the cable. To unplug, grasp the plug, not the cable.

Property Damage:
To avoid the risk of flooding, regularly inspect the unit for any signs of leakage.

This electronic instant hot water appliance is not intended for use by persons (including children) with reduced physical, sensory or mental capabilities, or lack of experience and knowledge, unless they have been given supervision or instruction concerning use of the appliance by a person responsible for their safety.

Children should be supervised at all times.

INSTALLATION REQUIREMENTS

Electrical Requirements

IMPORTANT: Observe all local governing codes and ordinances.

A 220/240 volt, 50 Hz, AC-only 13 amp fused, grounded electrical power supply is required. It is recommended that a separate circuit serving only your electronic instant hot water appliance be provided or use an outlet that can be turned on/off by a switch. This electronic instant hot water appliance is equipped with a standard UK3 pin plug. To minimise possible shock hazard, the cord must be plugged into mating, ground-type outlet, grounded in accordance with all national and local codes and ordinances. If a socket outlet is not available, it is the responsibility and obligation of the customer to have a properly grounded outlet installed by a qualified electrician.

Water Supply Requirements

IMPORTANT: If the water pressure to the hot water dispenser system is less than 150kPa (1.5 bar), performance may be affected. Also if the pressure of water inlet is above 500kPa (5 bar), the electronic instant hot water appliance may be damaged and will void the guarantee so an approved pressure reducing valve must be installed by a plumber.

We strongly recommend installing particle filters and isolation valves to both hot and cold feeds. This will help to prevent premature failure of valves and make any future maintenence easier. Flush the plumbing system before installing the mixer tap. This is to void plumbing residues clogging the mesh of the aerated outlet, or possibly damaging the valve's washers. This is especially important where extensive plumbing work has been carried out.

Environment Requirement

Don't install the electronic instant hot water appliance outdoors or in a location that may fall below zero degrees C. The pipes and the tap may freeze and there may be serious safety risks, possible bodily-injury, accidents and damage caused.

The installation environment should be ventilated, with protection from the direct sun. When installing the electronic instant hot water appliance, provide approximately 10cm to 15cm (4 - 5 ½") of air space on the sides of the unit for air circulation and approximately 2.5cm (1") from the mounting wall. Ensure that the electronic instant hot water appliance is placed so that you will be able to view and reach the touch control on the front face for adjustments.

The electronic instant hot water appliance must be mounted vertically and level. Before you begin, select a proper location ideally directly under the instant hot water tap or close to it to ensure the connection pipes will connect from the instant hot water tap to the electronic instant hot water appliance.

Instant Hot Water Tap Information

Unlike other household hot water appliances, this electronic instant hot water appliance is Non Pressurised for safety reasons. For this electronic instant hot water appliance, the Instant Hot Tap is placed before the electronic instant hot water appliance, creating an "open vent" system and consequently no pressure is built up inside the appliance. Consequently, there is a slight delay in water flow after the Hot Water Handle has been turned on. This is normal and indicates that the electronic instant hot water appliance is functioning properly.

INSTALLATION

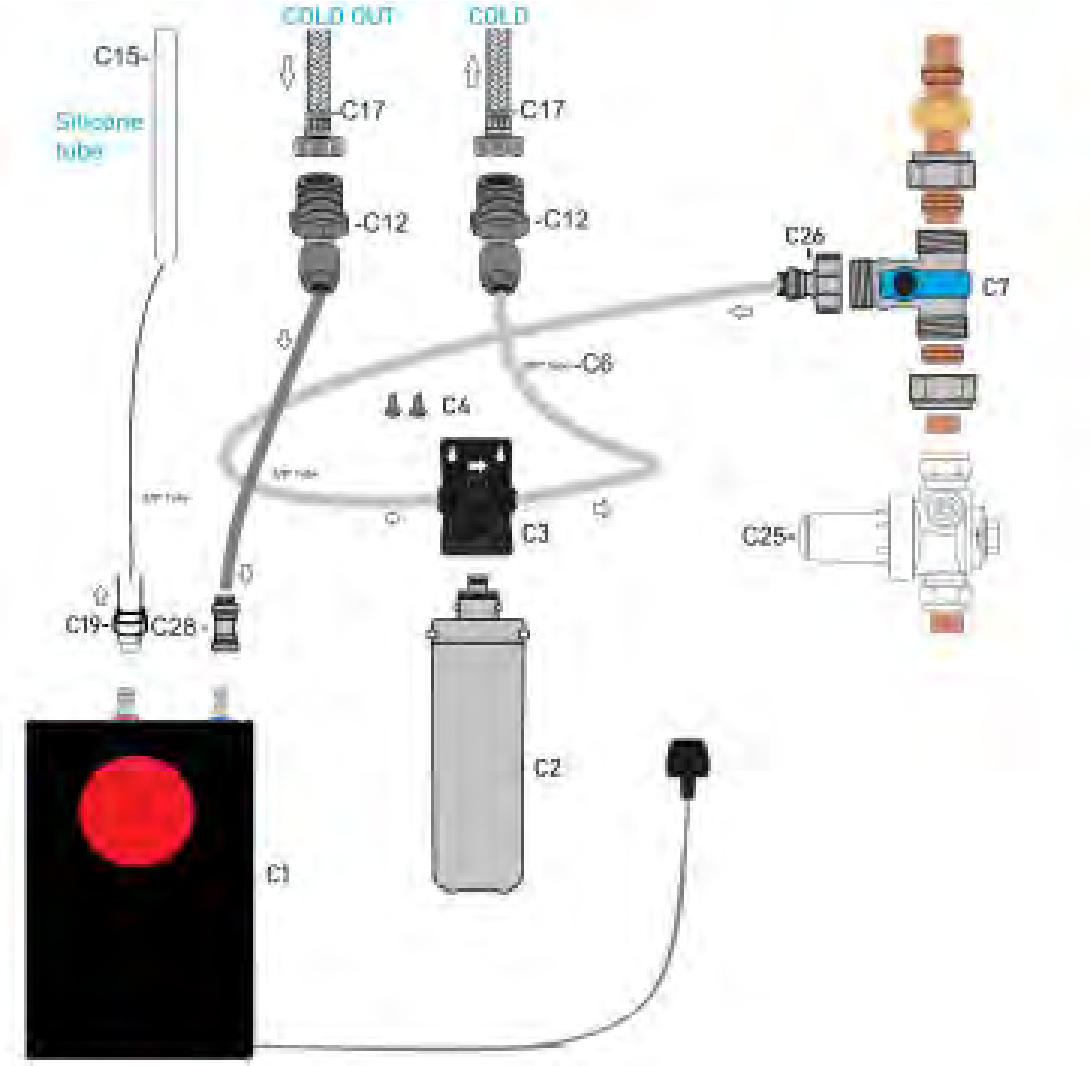

Step 1
Isolate your nearest 15mm cold mains water supply, Attach C7 to this supply and Install C25 (pressure reducing valve) to areas with high pressure (above 3 bar), recommended pressure is 2.5 bar. This should be checked and adjusted.

Step 2
Place C1 appliance into your desired location, ensuring that piping will reach without being stretched or kinked.

Using C4 screws Install filter head (C3) into its final position, Install filter with a quarter turn. (5cm clearance required below the filter for ease upon replacement.

Step 3
Install C26 to C7 with isolation valve shut.

Screw both, C12 Fittings into C17 tails, tighten to 4nm.

Measure distance from C26 to Left side fitting on C3 filter head. Using C6 3/8 pipe, cut piping to measured length and secure C6 pipe into both C26 fitting and left hand fitting on filter head. (1.5cm of pipe should be present inside fitting when fully installed).

Using C6 pipe, measure the distance between right hand fitting on C3 and C12 fitting on C17 cold inlet tail. Cut and install pipe into C12 and C3 fittings.

Measure the distance from C12 fitting on C17 cold outlet tail to tank stem fitting (blue). Trim the remaining C6 piping to this measurement and install pipe using C28 to complete tank feed attachments.

Feed C19 over C15 silicone tube. C15 can then be pushed over barbed outlet fitting on tank (red), using C19 to secure in place. (C15 can be trimmed down if to long).

Step 4
Prime and flush the system, turn isolation on at C7 and operate handle on tap until 2 litres of water has flowed form the spout. (this is the time to check for water tightness)

Step 5
Now you can turn your tank on at the mains. Hold the power button on the screen for 2 seconds. Allow around 10 minutes for the tank to achieve operating temperature. Once at temperature, allow a further 2 litres of hot water to flow from the spout.

TANK TEMPERATURE ADJUSTMENT

Selection of water outlet temperature: The machine can set several temperatures according to individual needs to provide options. Each time the "+" button is pressed, the set point temperature of the water outlet is set from low to high, and the machine provides the following temperatures: 45℃ -98℃. If you need to lower the temperature of the outlet water, press the "-" key to operate.

TANK PROGRAMS

The tank is preprogrammed to the correct settings and standard filter. The below adjustments can be made if a different filter is used or you wish to adjust the heating performance.

1) Press and hold the "+" button for 4 secounds, the digital tube displays the filter life selection function: "1-L" means that the filter element needs to be replaced when using 2000L water ("2-L" means 3800L and so on). Each time the "+" key is pressed, a filter element with a different life is selected. The machine provides: 2000L, 3800L, 5000L three different life filter elements for selection. The factory default value is "3800L".

2) Simultaneous timing function of the system, press the "Power On" button and the "+" button once at the same time, and "F6" will be displayed. Switch to "F1" by pressing the "+"or "-" key. Among them, F6 stands for setting the filter element to be used for six months or half a year. F1 stands for one year. Time is up or the amount of water in the filter element is up. After replacing the filter element, press and hold the "-" key for 4S to clear the replacement filter element alarm memory function and restore the time to the initial value. Everything goes into working fine.

3. Reheating interval temperature selection after temperature cooling down:

Press the "+" and "-" keys at the same time for 3 seconds, and the word "03" appears. At this time, press "+" to increase the number, and press "-" to decrease the number. 03 represents an interval of 3 degrees Celsius.

And so on: There are four kinds of interval temperature "2, 3, 4, 5" for selection inside. The initial value is "03".

4. Description of the water consumption indicator on the left side of the service life of the filter element:

1) When "1-L" 2000L water filter element is selected, one light will be turned off from top-to-bottom every time 330L of water is used up. When the last frame is displayed, it prompts to replace the filter element, and the machine sounds an alarm, please replace the filter element immediately. Otherwise, it will keep reminding every time the water is boiled.

2) When "2-L" is selected, that is, a 3800L water filter element, each time 543L of water is used up, one light will be turned off from top to bottom. When the last frame is displayed, it prompts to replace the filter element, and the machine sounds an alarm, please replace the filter element immediately. Otherwise, it will keep reminding every time the water is boiled.

3) When "3-L" is selected, that is, a 5000L water filter, a light will be turned off from top-to-bottom after every 714L of water is used up. When the last frame is displayed, it prompts toreplace the filter element, and the machine sounds an alarm, please replace the filter element immediately. Otherwise, it will keep reminding every time the water is boiled.





E1: After starting up, E1 is displayed, indicating that the local voltage does not match the working voltage set by the machine. Power off automatically within 2 seconds.

E3 means: the power is turned on, and E3 is displayed, indicating that the float is reversed, there is no water or the water level is too low. Automatically turn off the power switch within 2 seconds to prevent the heating plate from drying out.

E7: After the machine is turned on, the temperature sensor detects that the low temperature is between -2 °C and 2 °C, indicating that the pipeline is in danger of freezing, the machine displays E7, and the power is turned off within 2 seconds.

E8: After the heating is completed, the temperature sensor detects an excessively high temperature, exceeding 100°C, and displays E8. (collected by temperature sensor)

E9: The temperature does not rise within 120 seconds after the power is turned on, and E9 is displayed, indicating that the temperature sensor NTC is faulty, or the heating plate is invalid.

To turn off the electronic instant hot water appliance at any time press the button.

MAINTENANCE AND CARE

If the electronic instant hot water appliance is not being used for long periods of time ie: over 7 days, to save power we recommend you switch off using the plug switch. Isolate the tank via (C7) Flush the system out before using again. If you suffer from a reduction in flow rate follow the descale guide below. We recommend you descale your tank every 12 months. Soft scale can still build up in the tank even though you have a filter installed. Certain areas suffer from harder water than others, if you are in a very hard water area, we suggest doing this every 6-9 months. If you suffer from a reduction in flow rate follow the descale guide below.

DESCALE GUIDE

We recommend you descale your tank every 12 months. Soft scale can still build up in the tank even though you have a filter installed. Certain areas suffer from harder water than others, if you are in a very hard water area, we suggest doing this every 6-9 months. If you notice a drop in flow rate, long run off's after use or dripping. It is likely you need to descale your tank.

1. Turn off and allow the tank to cool.
2. Unscrew the hot and cold fittings with an adjustable spanner.
3. Using descaling fluid, pour the fluid into the tank via Red & Blue inlets. Follow the decaling product instructions for time and double the mixture strength.
4. Drain and repeat the process again.
5. Reconnect the tank and tighten the hot and cold connection just over hand tightness.
6. Run the kettle valve so that around 4 liters of water has passed and then switch the tank on and allow to heat fully. (Note: water will not exit the spout until the system is full of water). Run an additional 2 liters off once the tank is at temperature.

TROUBLE SHOOTING

PROBLEM	POSSIBLE CAUSE	WHAT TO DO
Water and Steam is spitting from the instant hot water tap spout.	Unit is boiling.	Unplug the tank and contact Sterling.
Water is not hot.	The electronic display has not been powered up.	Turn on the power and touch the on/off button and then set the required temperature and confirm the heat up.
Water is too hot.	Water temperature setting on display panel is set too high.	Re-set the temperature to the required temperature and confirm the heating up.

TROUBLE SHOOTING

PROBLEM	POSSIBLE CAUSE	WHAT TO DO
Water is dripping from the instant hot water tap spout.	The expansion chamber isn't draining the system correctly due to very small draw off of water.	Draw off 0.5L of water to clear and prime the system. Avoid less than 150ml draw offs of water.
	Lime-scale build up.	Descale the tank as per page 11.
Slow flow from the spout.	Water Filter may be clogged from impurities in the inlet mains water.	The water filter must be changed every 6 months or this will void the guarantee.
Water does not flow straight away.	The electronic instant hot water appliance is design for non-pressurised operation and there will be slight delay till the near boiling water appears.	After a large volume of water has been drawn off there slightly longer delay in the water appearing from the hot water tap spout.
No water flowing.	Water Valves have been turned off.	Turn on all the water valves.
	Inlet pipes have been twisted or blocked.	Ensure the pipes are not twisted or kinked to restrict flow.
	Aerator blocked.	Remove and clean the aerator.
	Lime-scale build up.	Descale the tank as per page 11.

IF YOU ARE IN ANY DOUBT THEN POWER OFF THE ELECTRONIC INSTANT HOT WATER APPLIANCE AND CALL STERLING

FILTER CARTRIDGE INSTALLATION

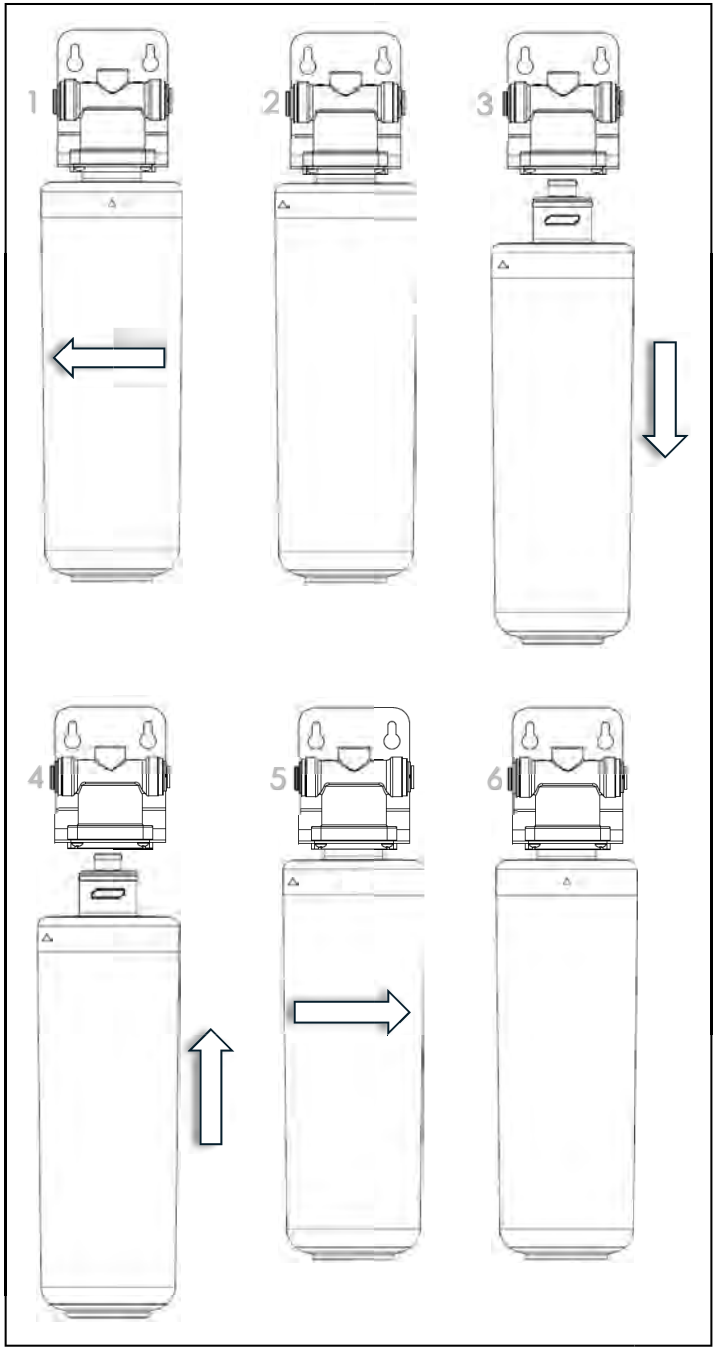

FILTER REMINDER RESET

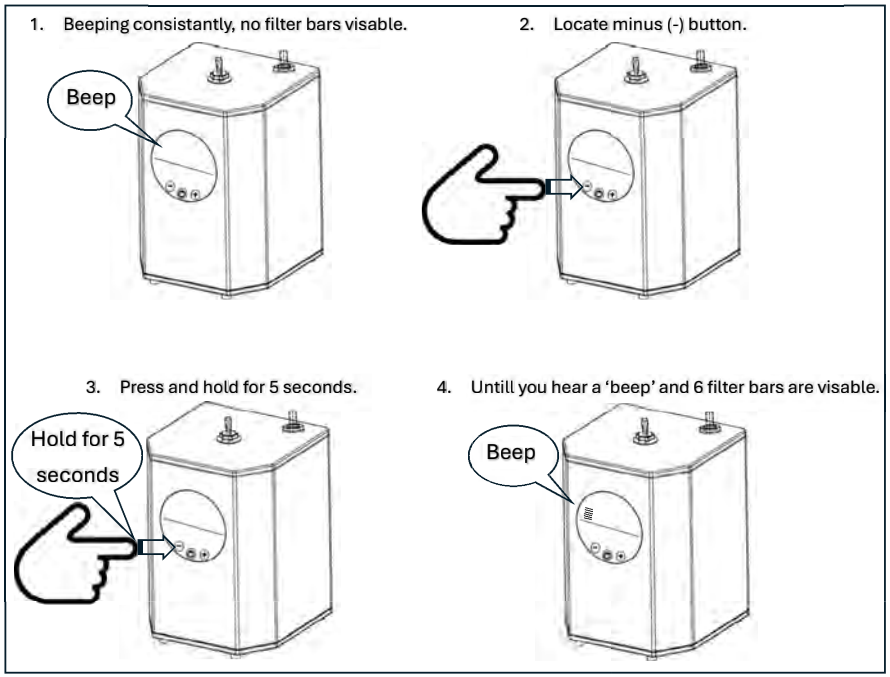

REGISTER YOUR WARRANTY

The Clearwater Kettle water filter must be replaced every 6 months regardless of the filter icon postion. Failure to do so will invalidate your product warranty. Only use genuine Clearwater kettle filters.

Register your warranty:
Fill in your free post form or register your tap/tank by scanning the QR

SCAN ME