# ANTEA AZG 611 78 REV Stone Grey | 114.0633.738



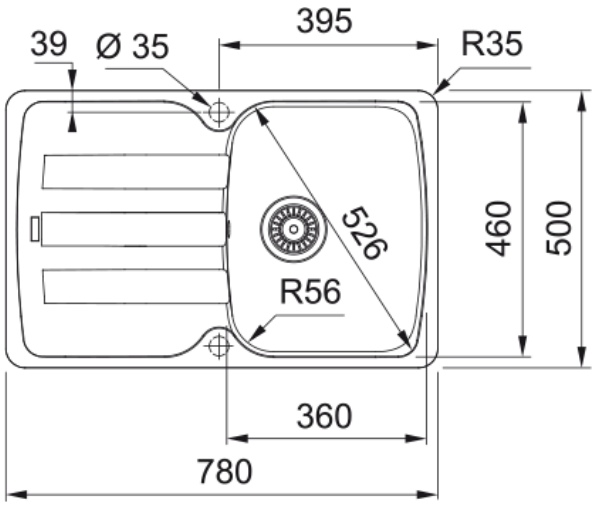


The Franke Antea AZG 611-78 is manufactured from an exceptionally tough material, highly resistant to burns, dents, chips and stains. Pioneered by Franke, Fragranite is a unique material with a subtle sheen that is warm to the touch thanks to its close to 80% of quartz sand. The surface is finely textured ensuring high hygiene standards. | Inset installation and reversible with 2 pre-formed tap holes. | 3½" semi-integrated waste with hygienic overflow. | 50 year Guarantee on all Franke sinks. | You can be reassured that all our Fragranite sinks are approved for use with our Water Hub instant boiling water taps.

---

| | |
|---|---|
| **Product Information** | |
| Sink type | Sink (w/ drainer) |
| Type of material | Granite |
| Number of bowls | 1 |
| Colour | Stone grey |
| Finish | None |
| Overflow | Yes |
| **Dimensions** | |
| External size: right to left | 780.0 |
| External size: front to back | 500.0 |
| Bowl 1 size: right to left | 360.0 |
| Bowl 1 size: front to back | 460.0 |
| Bowl 1: depth | 210.0 |
| Cutout inset: right to left | 760.0 |
| Cutout inset: front to back | 480.0 |
| **Installation** | |
| Minimum cabinet size | 45 cm |
| **Product specifications** | |
| Installation type | Inset |
| Waste outlet | 3 1/2" |
| Position of drainer | Reversible drainer |
| Bowl 1: accessory ledge | no |
| Design | traditional |
| **Product Identification** | |
| Product brand | FRANKE |
| Product family | Smart |

| | |
|---|---|
| Model range | Antea |
| Approval logo | CE |
| Approval logo | UKCA |
| **Properties** | |
| Drainers number | 1 |
| Product reversibility | Yes |
| Tap ledge | Yes |
| Waste kit include | Yes |
| Waste kit type | Manual |
| Siphon included | No |
| Number of tap holes | 2 - pre-formed |
| Soap dispenser hole | No |
| Minimum worktop thickness | 30 mm |
| Drain cover | No |