Athena Matt Black | 115.0659.322



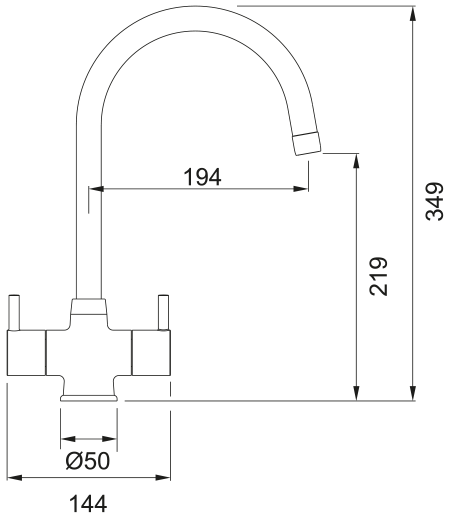

Athena Matt Black finish, Overall height 349mm, Twin Lever, Ceramic Valves, Perlator mixes air into the water to give a champagne- like flow, suitable for low pressure systems.

Product Information	
Spout version	J - spout
Colour	Matt Black
Type of material	Brass
Dimensions	
Tap hole diameter	35 mm
Cartridge dimension	1/2" headworks
Height Overall	349.0
Installation	
Fixation type	1 Bolt
Water supply hose connection	1/2"
Water supply hose length	255mm
Product specifications	
Pressure	Low pressure for standard
Version	Swivel
Tap operation	Dual lever
Tap rotation	180°
Product Identification	
Product brand	FRANKE
Product family	Smart
Model range	Athena
Properties	
Eco water saving	No
Type of aerator	Aerated