Athena Tap

Installation instructions



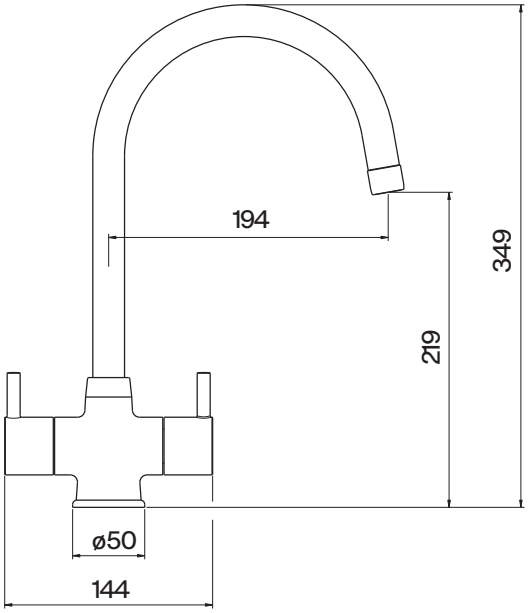

Technical data

Minimum water pressure: 7.25 PSI (0.5 bar)
Maximum water pressure: 75 PSI (5 bar)
Maximum hot water temperature: 70°C
Recommended hot water temperature: 65°C

Note: Exceeding these temperatures or water pressures can result in damage to the tap.

A pressure reducing valve may be required to be fitted in high water pressure situations.

Attention

Before installing the new mixer it is essential that you thoroughly flush through the supply pipes in order to remove any remaining swarf, solder or other impurities.

Failure to carry out this simple procedure could cause problems or damage to the workings of the mixer.

Having first checked all new connections, turn on the mains stopcock, close all taps except the new mixer and as the system starts to refill check for leaks.

Once you have satisfied yourself that there are no leaks, switch on the water heating.

Preparation

First shut off your water heating system then, with your mains stopcock closed, open the lowest hot and cold taps in the house and allow to run until the cold storage tank and pipes are empty (the hot water storage cylinder always remains full).

Installation

First screw the threaded stud into the mixer body. Screw the tails into the mixer body and fully hand tighten.

After making any necessary alterations to existing pipework, pass the plinth over the tails and fit in position.

The shaped upstand on the plinth will locate in the tap body and the 'O' ring should be placed in the recess to make a seal with the sink.

When the tap is in position (with the cold side on the right when viewed from the front) slide the retaining plate up to the underside of the sink, and secure by screwing the fixing nut finger tight.

Check that the mixer body and plinth are correctly positioned and fully tighten fixing nut.

It is recommended that 15 mm x 15 mm compression fittings be used to connect mixer to supply pipes. Cold is connected to the right and hot on the left when viewed from the front.

Warning

These hints have been prepared for your guidance, you must exercise due care at all times. We do not accept responsibility for any problems that may occur through incorrect installation.

NB: If for any reason the spout is removed from the tap, care must be taken when reinserting the spout into the body to ensure that the Grub Screw is located in the split of the white PTFE ring.

How to care for your tap

To maintain the appearance of this tap, ensure it is cleaned only using a clean, soft damp cloth. A solution of warm water and mild liquid detergent may be used where necessary, and then the fitting rinsed thoroughly. Abrasive cleaners or acidic cleaners MUST NOT BE USED under any circumstances. Avoid contact with all solvents.

Available finish

115.0311.211 Chrome
115.0311.215 SilkSteel
115.0659.322 Matt Black

Parts list as follows

FUN number	Part name	Part code
133.0068.761	Antisplash Chrome	SP1263 CH
133.0068.762	Antisplash SilkSteel	SP1263 SS
133.0664.469	Antisplash Matt Black	SP1263 MB
133.0314.654	Spout Chrome	SP1306 CH
133.0314.655	Spout SilkSteel	SP1306 SS
133.0664.497	Spout Matt Black	SP1306 MB
133.0085.007	Fixing nut Chrome	SP1243 CH
133.0150.095	Fixing nut SilkStreel	SP1243 SS
133.0664.499	Fixing nut Matt Black	SP1243 MB
133.0069.151	'O' ring kit	SP1239
133.0314.656	Hot handle Chrome	SP3898-H CH
133.0314.657	Cold handle Chrome	SP3898-C CH
133.0314.658	Hot handle SilkSteel	SP3898-H SS
133.0314.659	Cold handle SilkSteel	SP3898-C SS
133.0664.500	Hot handle Matt Black	SP3898-H MB
133.0664.511	Cold handle Matt Black	SP3898-C MB
133.0069.391	Bush for valve	SP3408
133.0358.056	Hot valve	SP3819-H
133.0358.057	Cold valve	SP3819-C
133.0068.833	Base plinth Chrome	SP2009 CH
133.0068.834	Base plinth SilkSteel	SP2009 SS
133.0664.512	Base plinth Matt Black	SP2009 MB
133.0314.660	Fixing kit	SP3827
133.0437.496	Flexi-tails	SP2596

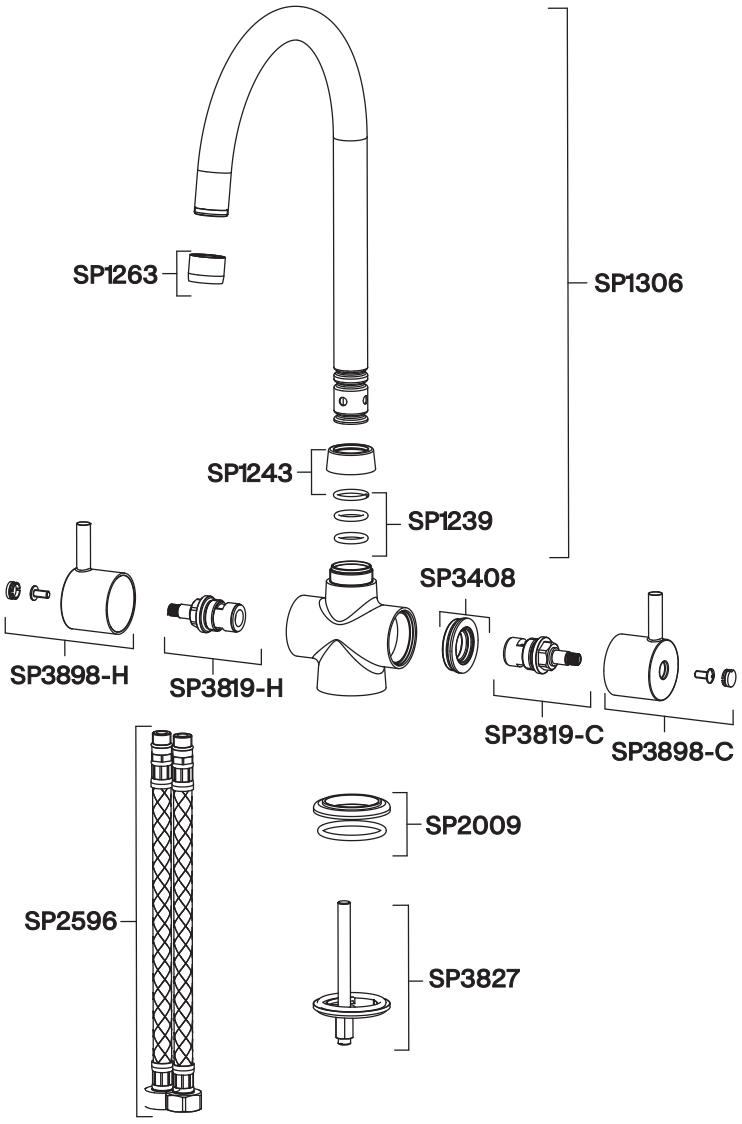

Guarantee

Your Franke mixer has been manufactured to the high standard you would expect of any Franke product but in the unlikely event that you should experience any defect in the materials or workmanship within one year of purchase, we will replace the faulty part free of charge. This is provided the mixer has only been used for normal domestic purposes in the UK and that the care, installation and maintenance instructions have been observed.

You should also retain your dated invoice as proof of purchase to validate any claims under our guarantee.

This one year guarantee is extended to five years in the case of the valve mechanism.

Normal wear and tear is excluded from the guarantee.

Decorative surface finishes are guaranteed for one year from the date of purchase provided our advice concerning care has been observed and no scouring agents have been used.

Scuffs and scratches caused by improper installation or accidental damage are not covered by this guarantee. Neither are slight shade variations or any damage or defect caused by incorrect installation or abuse of the fitting.

Service

For spare parts, servicing or any other queries, visit **www.franke.co.uk**

Optional tap brace

A large or heavy tap fitted to a stainless steel inset sink may occasionally flex the sink. To counteract this, Franke has developed an innovative tap brace that can be purchased separately. The tap brace connects the tap to the worktop and not just to the sink, offering additional support to the tap and much more stability when fitted. The tap brace has a variable collar to ensure it will fit most models of tap and can be used on any inset stainless steel sink.

The Franke tap brace is available on request from most kitchen retailers.



© Franke Technology and Trademark Ltd., Switzerland | 2025-07-28 | V01 | ID: 20287613

Franke UK Limited
West Park, MIOC
Styal Road
Manchester
M22 5WB
Tel: +44 (0)161 436 6280
Fax: +44 (0)161 436 2180
Email: info.uk@franke.com

For spare parts, servicing or any other queries, visit **www.franke.co.uk**