Basis BFG 651 REV Slate Grey | 114.0714.469



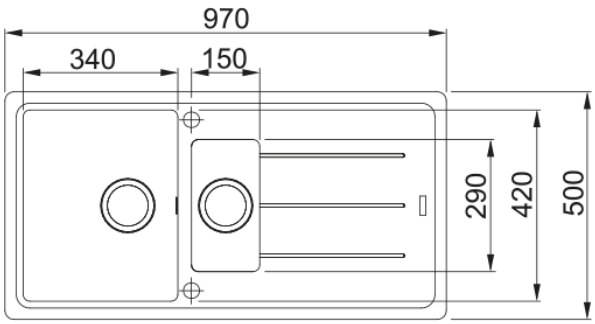

The Franke Basis BFG 651 is manufactured from an exceptionally tough material, highly resistant to burns, dents, chips and stains. Pioneered by Franke, Fragranite is a unique material with a subtle sheen that is warm to the touch thanks to its close to 80% of quartz sand. The surface is finely textured ensuring high hygiene standards. The sink is supplied with a plumbing set connector to connect the 2 bowls, as standard. | Inset installation and reversible with 2 pre-formed tap holes. | 3½" semi-integrated waste with hygienic overflow. | 50 year Guarantee on all Franke sinks. | You can be reassured that all our Fragranite sinks are approved for use with our Water Hub instant boiling water taps.

Product Information	
Sink type	Sink (w/ drainer)
Type of material	Granite
Number of bowls	1,5
Colour	Slate grey
Finish	None
Overflow	Yes
Dimensions	
External size: right to left	970.0
External size: front to back	500.0
Bowl 1 size: right to left	340.0
Bowl 1 size: front to back	420.0
Bowl 1: depth	200.0
Bowl 2 size: right to left	150.0
Bowl 2 size: front to back	290.0
Bowl 2: depth	100.0
Cutout inset: right to left	950.0
Cutout inset: front to back	480.0
Installation	
Minimum cabinet size	60 cm
Product specifications	
Installation type	Inset
Waste outlet	3 1/2"
Position of drainer	Reversible drainer
Bowl 1: accessory ledge	no
Bowl 2: accessory ledge	No

Active Twist Compatibility	Yes
Design	contemporary
Product Identification	
Product brand	FRANKE
Product family	None
Model range	Basis
Approval logo	CE
Approval logo	UKCA
Properties	
Drainers number	1
Product reversibility	Yes
Tap ledge	Yes
Waste kit include	Yes
Waste kit type	Manual
Siphon included	No
Number of tap holes	2 - pre-formed
Soap dispenser hole	No
Minimum worktop thickness	30 mm
Drain cover	No