Centro CNG 651-100 Matt Black | 114.0706.626

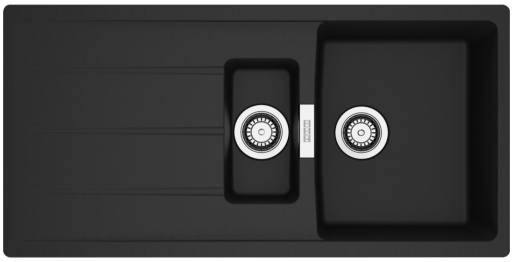

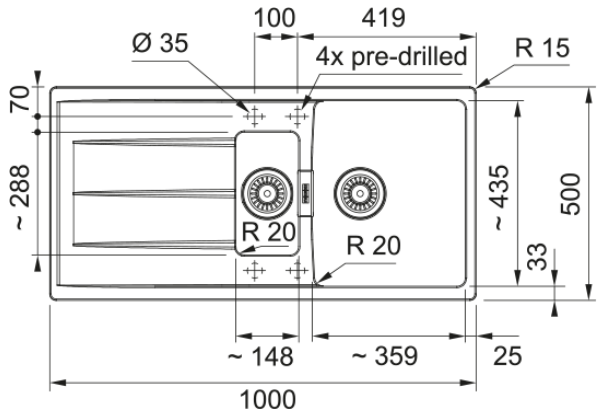

Centro CNG 651-100, Matt Black, 1000x500mm, Inset, Reversible, Fragranite with 3½" Waste with Overflow, 2 pre-formed tap holes, includes plumbing set connector to connect the 2 bowls. Pioneered by Franke, Fragranite is a unique material with a subtle sheen that is warm to the touch thanks to its close to 80% of quartz sand. The surface is finely textured ensuring high hygiene standards. 50 Year Guarantee on all Franke sinks. | You can be reassured that all our Fragranite sinks are approved for use with our Water Hub instant boiling water taps.

Product Information	
Sink type	Sink (w/ drainer)
Type of material	Granite
Number of bowls	1,5
Colour	Matt Black
Finish	None
Overflow	Yes
Dimensions	
External size: right to left	1000.0
External size: front to back	500.0
Bowl 1 size: right to left	359.0
Bowl 1 size: front to back	435.0
Bowl 1: depth	200.0
Bowl 2 size: right to left	148.0
Bowl 2 size: front to back	288.0
Bowl 2: depth	120.0
Cutout inset: right to left	980.0
Cutout inset: front to back	480.0
Installation	
Minimum cabinet size	60 cm
Product specifications	
Installation type	Inset
Waste outlet	3 1/2"
Position of drainer	Reversible drainer
Bowl 1: accessory ledge	no
Bowl 2: accessory ledge	No
Active Twist Compatibility	Yes

Installation Device	Clamp Bag
Design	contemporary
Product Identification	
Product brand	FRANKE
Product family	Maris
Model range	Centro
Approval logo	CE
Approval logo	UKCA
Properties	
Drainers number	1
Product reversibility	Yes
Tap ledge	Yes
Waste kit include	Yes
Waste kit type	Manual
Siphon included	No
Number of tap holes	4 - pre-formed
Soap dispenser hole	No
Minimum worktop thickness	30 mm
Drain cover	No