Eos Neo Swivel Spout Gold | 115.0689.092



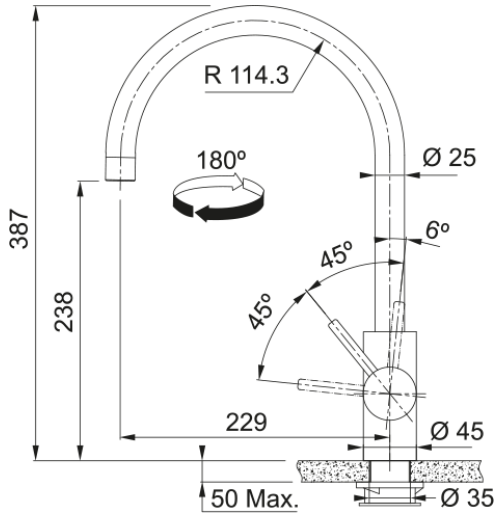

Tap Eos Neo Swivel spout, side lever, high pressure, stainless steel, Gold, with uk connector

---

Product Information	
Spout version	J - spout
Colour	Gold
Type of material	Stainless steel 304
Dimensions	
Tap hole diameter	35 mm
Cartridge dimension	35 mm
Height Overall	387.0
Installation	
Fixation type	Shank
Water supply hose connection	1/2"
Water supply hose length	450 mm
Product specifications	
Pressure	High pressure
Version	Swivel
Tap operation	Side lever
Tap rotation	180°
Product Identification	
Product brand	FRANKE
Product family	Maris
Model range	EOS NEO
Properties	
Eco water saving	No
Type of aerator	Laminar