Maris MRX 251 RHD | 127.0305.147



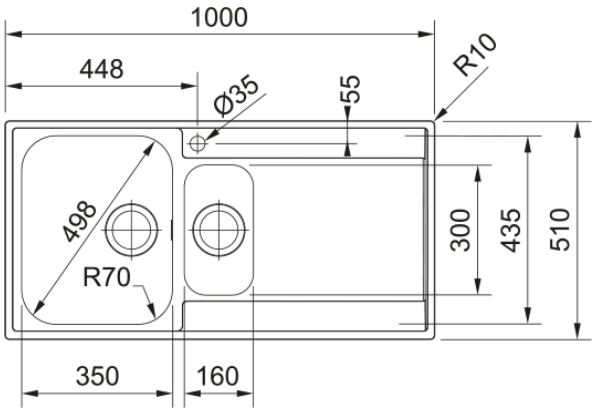

MARIS MRX 251 1000x510mm, Inset, Slim-Top Edge Profile, Right Hand Drainer, Silk Stainless Steel, 3½" Semi-Integrated Wastes with Hygienic Overflow, 1 tap hole. 50 Year Guarantee on all Franke sinks. This product is available through our Authorised Internet Partners and National Retailers - please click on the 'Where to Buy' link above. Please quote Product Name and Code as Article Number may differ.

Product Information	
Sink type	Sink (w/ drainer)
Type of material	Stainless steel
Number of bowls	1,5
Colour	Steel
Finish	Stainless steel brushed
Overflow	Yes
Dimensions	
External size: right to left	1000.0
External size: front to back	510.0
Bowl 1 size: right to left	350.0
Bowl 1 size: front to back	435.0
Bowl 1: depth	175.0
Bowl 2 size: right to left	160.0
Bowl 2 size: front to back	300.0
Bowl 2: depth	120.0
Installation	
Minimum cabinet size	60 cm
Product specifications	
Installation type	Flushmount
Installation type	Slimtop
Waste outlet	3 1/2"
Position of drainer	Right hand side drainer
Product Identification	
Product brand	FRANKE
Product family	Maris
Model range	Maris

Approval logo	CE
Approval logo	UKCA
Properties	
Drainers number	1
Product reversibility	No
Tap ledge	Yes
Waste kit include	Yes
Waste kit type	Manual
Siphon included	No
Number of tap holes	1
Soap dispenser hole	No
Drain cover	No