Maris Stripes Semi Pro Matt Black/Gold | 115.0747.679



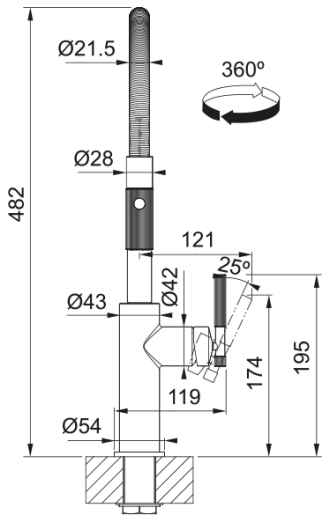

Maris Stripes Semi Pro Matt Black / Gold finish, Overall height 482mm, Pull Out Spray, Side Lever, Ceramic Mechanism, Unique ‘H- shape’ handle design, Laminar aerator with spray function. ECO Cartridge - designed to limit both the flow and temperature, the ECO Cartridge helps to actively save both water and energy; thanks to the stepped lever it is possible to reduce water usage by as much as 50%. Suitable for high pressure systems.

Product Information	
Spout version	S - semi-professional
Colour	Bi-Matt Black/Gold
Type of material	Brass
Flexible pullout hose material	Metal
Shower material	Brass
Dimensions	
Tap hole diameter	35 mm
Cartridge dimension	35 mm
Height Overall	482.0
Installation	
Fixation type	Shank
Water supply hose connection	3/8"
Water supply hose length	450 mm
Product specifications	
Pressure	High pressure
Version	Spray
Tap operation	Side lever
Tap rotation	360°
Mixed water flowrate @3bars	8.65
Product Identification	
Product brand	FRANKE
Product family	Maris
Model range	Maris Stripes
Properties	
Eco water saving	Yes
Type of aerator	Laminar

Magnetic holder	Yes
Shower version	Dual spray (needle & stream)