Maris Water Hub 3-in-1 Electronic GD | 160.0737.247



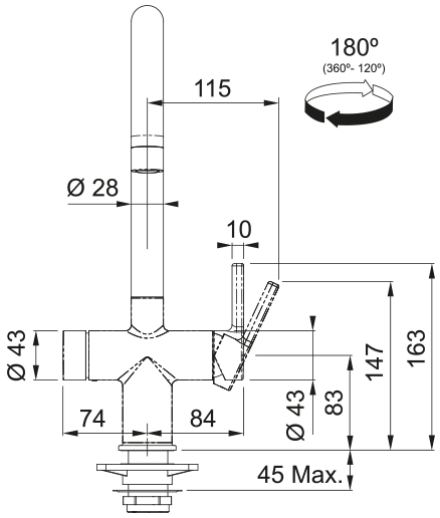

A premium 3-in-1 kitchen tap in classic gold, delivering cold, hot and filtered boiling water on demand. Designed to operate from a minimum water pressure of 1 bar, it combines elegant design, everyday convenience and energy efficiency in one sleek, space- saving solution. Performance features include: Electronic control helps prevent accidental activation of boiling water, providing enhanced safety and peace of mind. | Eco cartridge technology reduces water flow and energy consumption, helping to lower running costs while improving overall efficiency. | Advanced Pro-M filter with ion exchange resin enhances water taste and helps protect against limescale and mineral build-up, supporting long-lasting performance and reliability. | Compatible with a 4-in-1 filtration kit upgrade, allowing you to enjoy cold, filtered drinking water for added flexibility. | Get the most out of your Franke Maris Water Hub Instant Boiling Water tap with our Annual Maintenance Service. A yearly service will extend the lifespan of your system and allow you to keep using your tap worry free. | You can be reassured that all our Water Hub models are approved for use with all Franke sinks - Stainless Steel, Fragranite, Tectonite or Ceramic.

Product Information	
Version	Swivel
Colour	Gold
Finish	Metallic color
Handle operation	0/90
Type of material	Brass
Spout version	J - spout
Tap rotation	180°
Tap operation	Side lever
Filter max life (litres)	1700.0
Filter max life (months)	12.0
Filter performance	Bacteria
Filter performance	Chlorine
Filter performance	Heavy metals
Filter performance	Limescale
Filter performance	Microplastics
Filter performance	Odour
Filter performance	Pesticides
Filter performance	PFAS
Dimensions	
Tap height	388.0
Water supply hose length	500 mm

Device width	229.0
Device height	340.0
Device depth	229.0
Cartridge dimension	35 mm
Water supply hose connection	3/8"
Energy specifications	
(Re)heat time boiler	15 minutes
Eco water saving	Yes
Energy label	A
Max power consumption	1650.0
Voltage	220-240 V
Energy saving	No
Installation	
Fixation type	Shank
Tap hole diameter	35 mm
Product Identification	
Product brand	FRANKE
Product family	Maris
Model range	Maris Water Hub
Properties	
Type of multifunctional system	Electronic Boiling 3in1
Tank material	Heating tank-stainless steel
Type of operation	electronic
Pressure	High pressure
Type filtration	Active carbon
Type of aerator	Aerated
Filtered ambient water	no
Filtered boiling water	yes
Shower version	Single
Filter included	yes
Franke Home APP connection	no
Boiling water capacity	4.0
Boiling water flow rate	4.5
Mix water flow rate	6.8