MYTHOS BOWLS MYX 160 34-16 LHSB | 122.0607.062



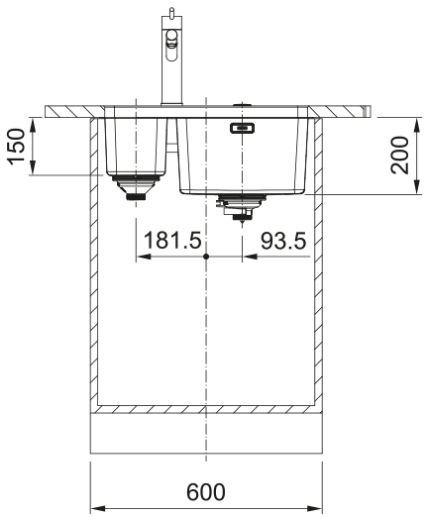

MYTHOS BOWLS MYX 160 34-16 LHSB 555x430mm, Undermount, Left Hand Small Bowl, Matt Brushed Stainless Steel, 3½" Semi-Integrated Wastes with Hygienic Overflow. The range features tight bowl radii, a bowl depth of 200mm, and a round flush cover plate giving a smooth base protecting pots and glasses. 50 Year Guarantee on all Franke sinks.

Product Information	
Sink type	Bowl (no drainer)
Type of material	Stainless steel
Number of bowls	1,5
Colour	Steel
Finish	Stainless steel brushed
Overflow	Yes
Dimensions	
External size: right to left	555.0
External size: front to back	430.0
Bowl 1 size: right to left	340.0
Bowl 1 size: front to back	400.0
Bowl 1: depth	200.0
Bowl 2 size: right to left	160.0
Bowl 2 size: front to back	400.0
Bowl 2: depth	150.0
Installation	
Minimum cabinet size	60 cm
Product specifications	
Installation type	Undermount
Waste outlet	3 1/2"
Position of drainer	No drainer
Active Twist Compatibility	Yes
Product Identification	
Product brand	FRANKE
Product family	Mythos
Model range	Mythos

Approval logo	CE
Approval logo	UKCA
Properties	
Drainers number	No drainer
Product reversibility	No
Tap ledge	No
Waste kit include	Yes
Waste kit type	Manual
Siphon included	No
Number of tap holes	No tap hole
Soap dispenser hole	No
Minimum worktop thickness	30 mm
Drain cover	Yes