Mythos Pull-Out Nozzle Stainless Steel | 115.0689.097



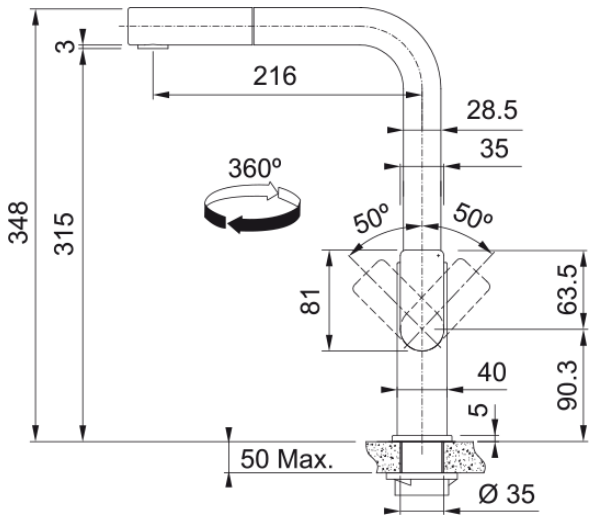

Mythos Pull-Out Nozzle Tap Stainless Steel finish, Overall height 348mm, Side Lever, Ceramic valves, suitable for high pressure systems. The tap combines a timeless, solid design and high-end finish with excellent performance and durability, the pull-out nozzle makes the washing up or rinsing vegetables that bit easier.

Product Information	
Spout version	L - spout
Colour	Stainless steel
Type of material	Stainless steel 304
Flexible pullout hose material	Nylon black
Shower material	Stainless steel
Dimensions	
Tap hole diameter	35 mm
Cartridge dimension	35 mm
Height Overall	348.0
Installation	
Fixation type	Shank
Water supply hose connection	1/2"
Water supply hose length	450 mm
Product specifications	
Pressure	High pressure
Version	Pull out
Tap operation	Side lever
Tap rotation	360°
Product Identification	
Product brand	FRANKE
Product family	Mythos
Model range	MYTHOS
Properties	
Eco water saving	No
Type of aerator	Aerated
Shower version	Single