TRITON

T80Z FAST-FIT
electric shower

REGISTER ONLINE
ENTER A PRIZE DRAW

WIN £100

RETAIL VOUCHERS

VISIT OUR WEBSITE TODAY

TRITONSHOWERS.CO.UK/REGISTER

PRODUCT REGISTRATION IS ONLY AVAILABLE TO UNITS PURCHASED & INSTALLED IN THE UK

FOR YOUR SERVICE REFERENCE

NOTE DOWN THE PRODUCT CODE BELOW
(FROM THE FRONT OR TOP OF THE BOX)

_ _ _ _ _ _ _ _ _ _ _ _ _ _ _ _ _ _

ALTERNATIVELY REGISTER BY TEL: 024 7637 8321

IMPORTANT SAFETY ADVICE

The shower unit **MUST BE** switched off at the isolating switch when not in use. This is a safety procedure recommended for all electrical appliances.

The shower head and hose supplied with this product are a safety critical part of your shower. Failure to use genuine Triton parts may cause injury and invalidate your guarantee.

INSTALLATION AND OPERATING INSTRUCTIONS

Please read this book thoroughly and familiarise yourself with all instructions before commencing installation and keep it for future reference.

The shower installation **MUST** be carried out by a suitably qualified person, **in the sequence of this instruction book.**

2180834Z - September 2025

Patents: GB 2489547
GB 2495343
GB 2481878

PLEASE READ THIS IMPORTANT SAFETY INFORMATION

Products manufactured by Triton are safe and without risk provided they are installed, used and maintained in good working order in accordance with our instructions and recommendations.

⚠ **WARNING:** The appliance must not be positioned where it will be subjected to freezing conditions. If suspected of being frozen, do not use.

⚠ **DO NOT** operate the appliance if the shower head or spray hose becomes damaged.

⚠ **DO NOT** restrict flow out of the appliance by placing shower head in direct contact with your body.

⚠ **DO NOT** operate the appliance if water ceases to flow during use or if water has entered inside the unit because of an incorrectly fitted cover.

⚠ **WARNING: If restarting the appliance immediately after stopping, be aware that a slug of hot water will be expelled for the first few seconds.**

⚠ The shower head must be descaled regularly.

⚠ Fit only shower heads recommended by the manufacturer and never fit any additional device to restrict the water outlet flow.

⚠ The outlet must not be connected to any tap or fitting other than those specified.

⚠ This appliance is intended to be permanently connected to the water mains and not connected by a hose set.

⚠ A suitable double pole isolation switch for supply disconnections must be incorporated in the fixed wiring circuit in accordance with current wiring rules. See Electrical Installation section for further details.

⚠ The water inlet of this appliance shall not be connected to inlet water obtained from any other water heating system.

⚠ **WARNING:** This appliance is not to be used to provide a potable water supply.

⚠ Always disconnect the appliance from the supply before assembling, disassembling or cleaning.

Mains water pressure only.
Minimum inlet pressure 100kPa (1 bar) 150kPa (1.5 bar) for 10.5kW
Maximum inlet pressure 1000kPa (10 bar)

This book contains all the necessary fitting and operating instructions for your electric shower.
Care taken during the installation will provide a long, trouble-free life from your shower.

⚠ WARNING ⚠

This appliance can be used by children aged from 3 years and above and persons with reduced physical, sensory or mental capabilities or lack of experience and knowledge if they have been given supervision or instruction concerning use of the appliance in a safe way and understand the hazards involved. Children shall not play with the appliance. Cleaning and user maintenance shall not be made by children without supervision.

IMPORTANT - PLEASE READ THESE GENERAL GUIDANCE NOTES BEFORE PROCEEDING

1 GENERAL

1.1 Isolate the electrical and water supplies before removing the cover.

1.2 Read all of these instructions and retain them for later use.

1.3 **DO NOT** take risks with plumbing or electrical equipment.

1.4 Isolate electrical and water supplies before proceeding with the installation.

1.5 The unit must be mounted onto the finished wall surface (on top of the tiles). **DO NOT** tile up to or seal around **ANY PART** of the unit using silicone sealer after fixing to the wall. Special care must be taken **NOT TO BLOCK OR SEAL ANY PRD VENTS ON THE UNIT**.

1.6 Contact Customer Experience *(see back page)*, if any of the following occur:

a) *If it is intended to operate the shower at pressures above the maximum or below the minimum stated.*

b) *If the unit shows a distinct change in performance.*

c) *If the shower is frozen.*

1.7 If it is intended to operate the shower in areas of hard water (above 200 ppm temporary hardness), a scale inhibitor may have to be fitted. For advice on the Scale Inhibitor, contact Customer Experience.

1.8 The shower head must be cleaned regularly with descalent to remove scale and debris, otherwise restrictions to the flow on the outlet of the unit will result in higher temperatures and could also cause the (PRD) Pressure Relief Device in the unit to operate.

1.9 This product is not suitable for mounting into steam rooms or steam cubicles.

2 PLUMBING

2.1 The plumbing installation must comply with Water Regulations, Building Regulations or any particular regulations as specified by Local Water Company or Water Undertakers and should be in accordance with BS EN 806.

2.2 The supply pipe must be flushed to clear debris before connecting to the shower unit.

2.3 **DO NOT** solder pipes or fittings within 300mm of the shower unit, as heat can transfer along the pipework and damage components.

2.4 **DO NOT** fit any form of outlet flow control as the outlet acts as a vent for the heater can.

2.5 **DO NOT** use excessive force when making connections to the flexible hose or shower head, finger tight is sufficient.

2.6 All plumbing connections must be completed before making the electrical connections.

2.7 This appliance **MUST NOT** be connected to the inlet supply by a hose-set.

3 ELECTRICAL

3.1 The installation must comply with BS 7671 'Requirements for electrical installations' (IEE wiring regulations), building regulations or any particular regulations as specified by the local Electrical Supply Company.

3.2 This appliance **MUST** be earthed.

3.3 In accordance with 'The Plugs and Sockets etc. (Safety) Regulations 1994', this appliance is intended to be permanently connected to the fixed wiring of the electrical mains system.

3.4 Make sure all electrical connections are tight to prevent overheating.

3.5 A 30mA residual current device (RCD) **MUST** be installed in all UK electric and pumped shower circuits. This may be part of the consumer unit or a separate unit.

3.6 Switch off immediately at isolating switch if water ceases to flow during use.

3.7 Other electrical equipment i.e. extractor fans, pumps, must not be connected to the circuits within the unit.

3.8 Switch off at isolating switch when not in use. This is a safety procedure recommended with all electrical appliances.

3.9 As with all electrical appliances it is recommended to have the shower and installation checked at least every two years by a competent electrician to ensure there is no deterioration due to age and usage.

The following points will help you understand how the shower operates:

a. The electric heating elements operate at a constant rate at your chosen power setting. It is the rate of the water passing through the heater can which determines the water temperature. The slower the flow, the hotter the water becomes; the faster the flow, the cooler the water.

b. During winter, the mains water supply will be cooler than in the summer. The flow rate will vary between seasons at any one temperature setting. At different times of the year you may have to adjust the position of the temperature control to maintain your desired temperature setting.

c. The stabiliser valve minimises variations in shower temperature during mains water pressure changes. If changes in shower temperature are experienced during normal use, it will most likely be caused by the water pressure falling near to or below the minimum level. The drop in pressure may be due to water being drawn off at other points in the house whilst the shower is in use. If pressure drops appreciably below the minimum, the heating elements will automatically cut out.

NOTE: If ever the water becomes too hot and you cannot obtain cooler water, first check that the sprayplate in the shower head has not become blocked.

DO NOT place items such as soap or shampoo bottles on top of the unit. Liquid could seep through the joint between the cover and backplate.

IMPORTANT ADVICE TO USERS

⚠ COMISSIONING ADVICE

When first installed the unit will be empty. It is essential the unit should contain water before the elements are switched on. It is vital that the commissioning procedure is followed. Failure to carry out this operation will result in damage to the unit and will invalidate the guarantee.

ADVISORY - CLEANING

It is recommended that all products are cleaned using warm, soapy water.

DO NOT use abrasive or aggressive chemical cleaning products as this may affect the product surface finish and invalidate your guarantee.

To check the product suitability for commercial and multiple installations, please contact Triton's specification advisory service before installation.

Telephone: 024 7637 2222

Email: technical@tritonshowers.co.uk

PLEASE USE THE FOLLOWING CHECK LIST TO AID YOUR INSTALLATION

Tick off as you complete

SECTION 1	Check that the water supply will satisfy requirements	☐ 1
SECTION 2	Check that water & cable entry points of the unit meet requirements	☐ 2
SECTION 3	Check that the electric supply will satisfy requirements	☐ 3
SECTION 4	Siting of the shower	☐ 4
SECTION 5	Plumbing installation	☐ 5
SECTION 6	Electrical installation	☐ 6
SECTION 7	Fit to the wall & connect the shower supplies	☐ 7
SECTION 8	Fitting the cover	☐ 8
SECTION 9	**ONLY *Commission the shower in the way described***	☐ 9
SECTION 10	Familiarise yourself with the user operating instructions	☐ 10

CONTENTS Page

INTRODUCTION
IMPORTANT SAFETY INFORMATION & GENERAL GUIDANCE NOTES *(please read)*
GENERAL ADVICE TO USERS - CLEANING ADVICE
INSTALLATION CHECK LIST *(PLEASE FOLLOW & COMPLETE)*

SPECIFICATIONS 7

DIMENSIONS & CABLE/WATER ENTRY POINTS 8

ELECTRICAL REQUIREMENTS ..... 9 - 10

INSTALLING THE SHOWER ..... 11 - 19
Siting of the shower ..... 11 - 12
Plumbing installation 13
Electrical installation 14
Fit to the wall & connect shower supplies ..... 14 - 17
Fitting the cover ..... 18 - 19
COMMISSIONING PROCEDURE 20

USER OPERATING INSTRUCTIONS & FUNCTIONS ..... 21 - 22

Cleaning the filter - installers & service engineers only 23

Fault finding/Troubleshooting ..... 24 - 25

Spare parts 26

SHOWER CONTROLS - QUICK USER GUIDE 27

UK Service Policy/UK Guarantee ..... Rear cover

PRODUCT FICHE				
Model	7.5kW	8.5kW	9.5kW	10.5kW
Load Profile	XS	XS	XS	XS
Energy Efficiency Class	A	A	A	A
Energy Efficiency (%)	39	39	39	39
Annual Electricity Consumption (kwh)	477	474	473	474
Sound Power Level (db)	15	15	15	15

ELECTRICAL	
Nominal power - rating at 240V	Nominal power - rating at 230V
7.5kW – (32A MCB rating)	6.9kW – (32A MCB rating)
8.5kW – (40A MCB rating)	7.8kW – (40A MCB rating)
9.5kW – (40A MCB rating)	8.7kW – (40A MCB rating)
10.5kW – (45A MCB rating)	9.6kW – (45A MCB rating)
PLUMBING (see page 11 & 12 for water regulations)	
Supply Source	Mains pressure cold water only
Minimum running pressure and flow to the inlet of the shower for full performance	100kPa (1.0 bar) at 8 litres per minute for **7.5kW**, **8.5kW**, **9.5kW** & **ECO**
	150kPa (1.5 bar) at 11 litres per minute for **10.5kW**
Maximum static pressure	1000 kPa (10 bar)
Maximum inlet temperature	28°C
Minimum inlet temperature	2°C
Inlet connection	15mm diameter
Outlet connection	½" BSP male thread
MATERIALS	
ABS	Backplate, cover, controls, shower head
Acetal	Sprayplate
Minerally insulated corrosion resistant metal sheathing	Elements
STANDARDS and APPROVALS	
Splashproof rating	IPX4
Safety	Complies with the requirements of current British and European safety standards for household and similar electrical appliances
BEAB	Complies with requirements of the British Electrotechnical Approvals Board (BEAB)
CE / UKCA	Meets with Compliance with European/UK Community Directives

Fig.1

DIMENSIONS

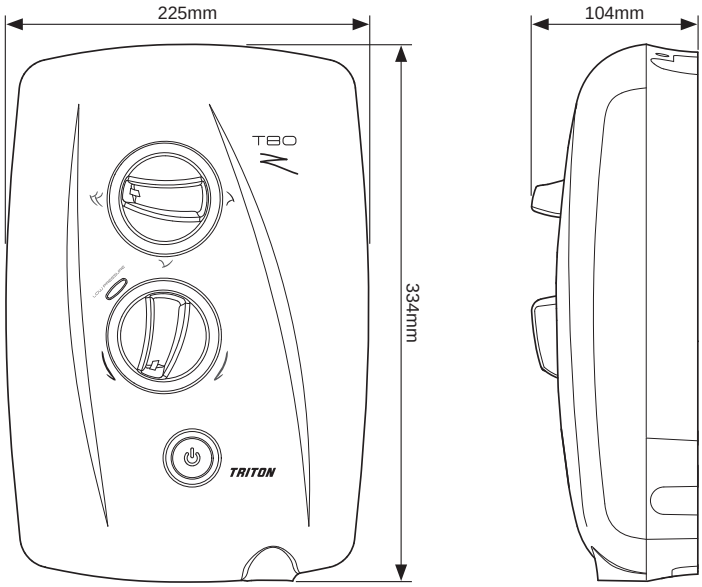

Fig.2

ENTRY POINTS

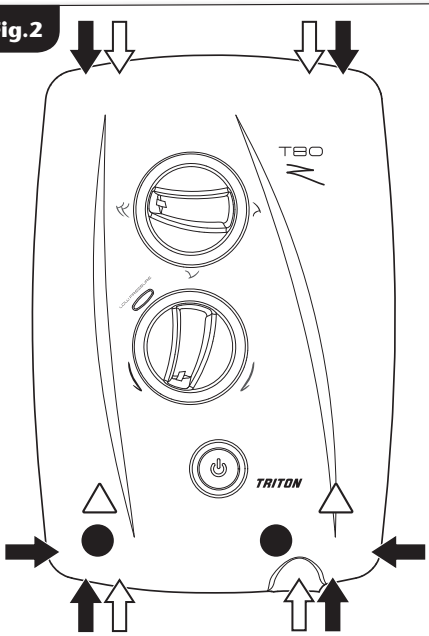

WATER ● = Back ➡ = Others

Left: Top, bottom, back & side

Right: Top, bottom, back & side

CABLE △ = Back ⇨ = Others

Left: Top, bottom & back

Right: Top, bottom & back

PLEASE NOTE: *Deviation from the approved entry points will invalidate product specifications and warranty.*

ELECTRICAL REQUIREMENTS

⚠ WARNING! ⚠

THIS APPLIANCE MUST BE EARTHED. IT IS STRONGLY RECOMMENDED TO USE A MINIMUM OF 10MM CABLING THROUGHOUT THE SHOWER INSTALLATION.

The installation, supply cable and circuit protection must conform with BS 7671 (IEE wiring regulations) and be sufficient for the amperage required.

The following notes are for guidance only:

1 The shower must only be connected to a 230-240V ac supply. If you are installing a shower with a kilowatt rating above 9kW, it is advisable to contact the local electricity supply company.

1.1 The electrical rating of the shower is shown on the rating label **(Fig.3)** within the unit.

2 Before making any sort of electrical connection within the installation, make sure that no terminal is live. If in any doubt, switch off the whole installation at the mains supply and remove the correct fuse.

3 The shower must be connected to its own independent electrical circuit. **IT MUST NOT** be connected to a ring main, spur, socket outlet, lighting circuit or cooker circuit.

3.1 The electrical supply must be adequate for the loading of the unit and existing circuits.

4 Check your consumer unit (main fuse box) has a main switch rating of 80A or above and that it has a spare fuse way which will take the fuse or Miniature Circuit Breaker (MCB) necessary for the shower **(Fig.4)**.

4.1 If your consumer unit has a rating below 80A or if there is no spare fuse way, then the installation will not be straightforward and may require a new consumer unit serving the house or just the shower. You will need to contact the local electricity company. They will check the supply and carry out what is necessary.

5 For close circuit protection **DO NOT** use a rewireable fuse. Instead use a suitably rated Miniature Circuit Breaker (MCB) or cartridge fuse **(see Table A)**.

5.1 A 30mA residual current device (RCD) **MUST** be installed in all UK electric and pumped shower circuits. This may be part of the consumer unit or a separate unit.

Fig.3 - Illustrative purposes only

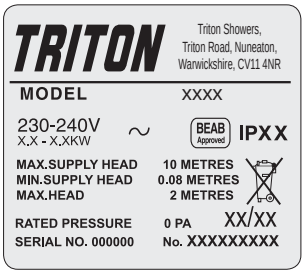

Fig.4 Schematic of installation circuit

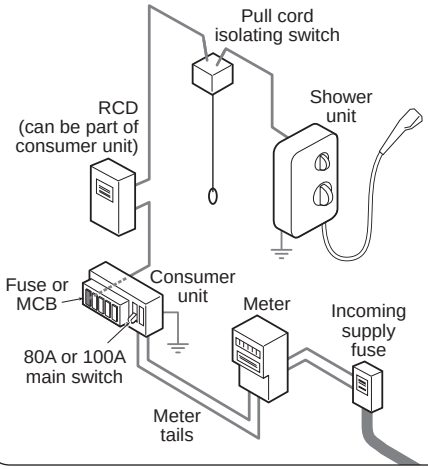

Table A

CIRCUIT PROTECTION		
unit rating	**MCB**	**cartridge fuse**
7.0kW	30/32A	30A
7.5kW	32A	35A
8.0kW	40A	35A
8.5kW	40A	45A
9.0kW	40A	45A
9.5kW	40/45A	45A
10.5kW	45A	45A

6 A 45 amp double pole isolating switch with a minimum contact gap of 3mm in both poles must be incorporated in the circuit.

6.1 It must have a mechanical indicator showing when the switch is in the OFF position and the wiring must be connected to the switch without the use of a plug or socket outlet.

6.2 The switch must be accessible and clearly identifiable, but out of reach of a person using a fixed bath or shower, except for the cord of a cord operated switch, and should be placed so that it is not possible to touch the switch body while standing in a bath or shower cubicle. It should be readily accessible to switch off after using the shower.

7 Where shower cubicles are located in any rooms other than bathrooms, all socket outlets in those rooms must be protected by a 30mA RCD.

8 The current carrying capacity of the cable must be at least that of the shower circuit protection **(see Table B)**.

8.1 To obtain full advantage of the power provided by the shower, use the shortest cable route possible from the consumer unit to the shower.

8.2 It is also necessary to satisfy the disconnection time and thermal constraints which means that for any given combination of current demand, voltage drop and cable size, there is a maximum permissible circuit length.

9 The shower circuit should be separated from other circuits by at least twice the diameter of the cable or conduit.

9.1 The current rating will be reduced if the cabling is bunched with others, surrounded by thermal loft or wall insulation or placed in areas where the ambient temperature is above 30°C. Under these conditions, derating factors apply and it is necessary to select a larger cable size.

9.2 In the majority of installations **(see Table B)**, the cable will unavoidably be placed in one or more of the above conditions. This being so, **it is strongly recommended to use a minimum of 10mm cabling throughout the shower installation.**

9.3 In any event, it is essential that individual site conditions are assessed by a competent electrician in order to determine the correct cable size and permissible circuit length.

Table B

Twin and earth PVC insulated cable Current carrying capacity

Installed in an insulated wall	In conduit trunking	Clipped direct or buried in a non-insulated wall
6mm² 32A	6mm² 38A	6mm² 46A
10mm² 43A	10mm² 52A	10mm² 63A
16mm² 57A	16mm² 69A	16mm² 85A

Note: Cable selection is dependent on derating factors

***The method below may be used by installers to determine the approximate size of the incoming cable.**

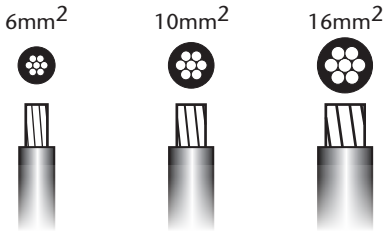

1. Measure the width of an individual strand, and half that measurment to find *(r)*, e.g: *1.34mm ÷ 2 = (r) 0.67mm*
2. Multiply *(r) x (r)* x *3.14*, e.g: *(r) 0.67 x (r) 0.67* x *3.14 = 1.41mm²*
3. Multiply this by the number of wire strands (usually 7), e.g: *1.41mm² x 7 = 9.87mm².*
4. The number obtained would suggest *10mm²* wiring.

***PLEASE NOTE:** *If unsure, consult a qualified Electrician.*

SITING OF THE SHOWER

The installation must be in accordance with Water Regulations/Bylaws - **see page 7 for water specifications**

- If it is intended to operate the shower at pressures above the maximum or below the minimum stated, contact Customer Experience for advice.
- If the stated flow rates are not available, it may not be possible to achieve optimum performance from the unit throughout the year.
- During periods of high ambient temperatures it may be necessary to select the economy power setting to achieve your preferred shower temperature.

NOTE: ***The T80z Eco flow rate is limited to 6 litres per minute. During the warmer months it may be necessary to select the economy power setting.***

Fig.5 shows a typical system layout.

NOTE: ***The control knobs are an integral part of the cover. Do not attempt to remove them.***

- Lift the cover from the backplate and remove the trimplate.
- Refer to **fig.6** for the correct siting of the shower. Position the unit where it will **NOT** be in direct contact with water from the shower head. Position the shower unit vertically.
- Allow enough room between the ceiling and the shower to access the cover top screws.
- Mark out entry points and routing of the water and electric supplies into the shower.

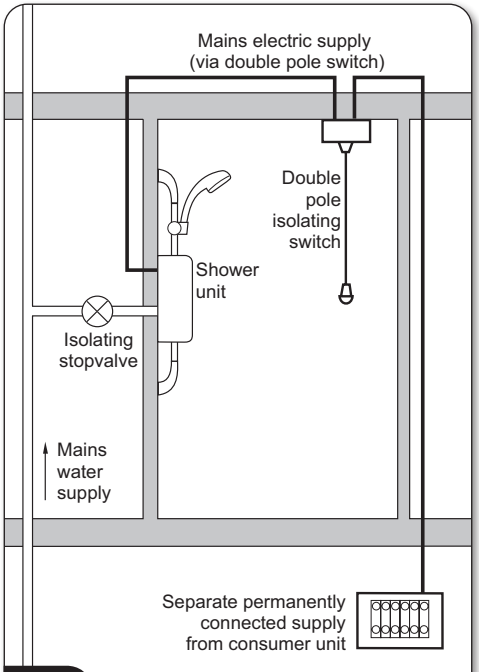

Fig.5 **Diagrammatic view - not to scale**

IMPORTANT: Water Regulations (fig.6)

- It is required that the shower head be '***constrained by a fixed or sliding attachment so that it can only discharge water at a point not less than 25mm above the spill-over level of the relevant bath, shower tray or other fixed appliance'.***
- If the riser kit is supplied with a bespoke hose retainer, it will in most cases meet this requirement. If the shower head can still be placed within a bath, basin or shower tray within the 25mm limit, then a double check valve, or similar, **MUST be fitted in the supply pipework to prevent back-flow**.

Pressure Relief Safety Device

- A pressure relief device (PRD) is designed into the shower unit which complies with European standards. The PRD provides a level of appliance protection should an excessive build up of pressure occur within the shower.

DO NOT ***operate the shower with a damaged or kinked shower hose, or a blocked shower head. This may cause the PRD to operate.***

- When commissioning, the shower head must be removed from the flexible hose. Failure to follow this procedure may cause the PRD to operate.
- Make sure the shower is positioned over a bath or shower tray. If the PRD operates, then water will eject from the bottom of the unit. Should this happen, turn off the electricity and water supplies to the shower at the isolating switch and stopvalve. Contact Customer Experience for advice on replacing the PRD.

⚠ WARNING

The shower **MUST NOT** be positioned where it will be subjected to freezing conditions.

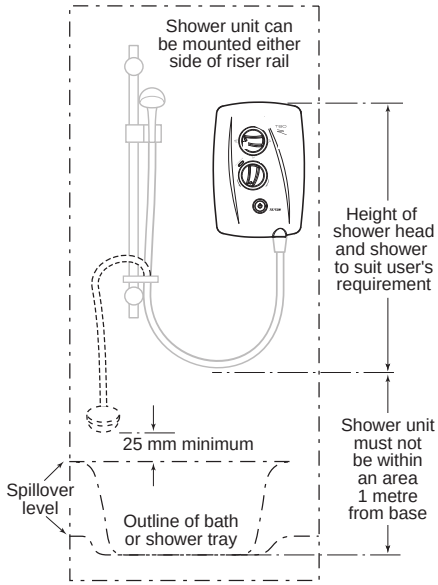

Fig.6 **Diagrammatic view – not to scale**

IMPORTANT: ***If installing onto a tiled wall,*** **ALWAYS** ***mount the unit on the surface of the tiles.*** **NEVER** ***tile up to the unit.***

IMPORTANT: ***The unit must be mounted on a flat surface which covers the full width and length of the backplate. It is important that the wall surface is flat otherwise difficulty may be encountered when fitting the cover and subsequent operation of the unit may be impaired.***

IMPORTANT INFORMATION

The outlet of the shower acts as a vent and must not be connected to anything other than the hose and shower head supplied.

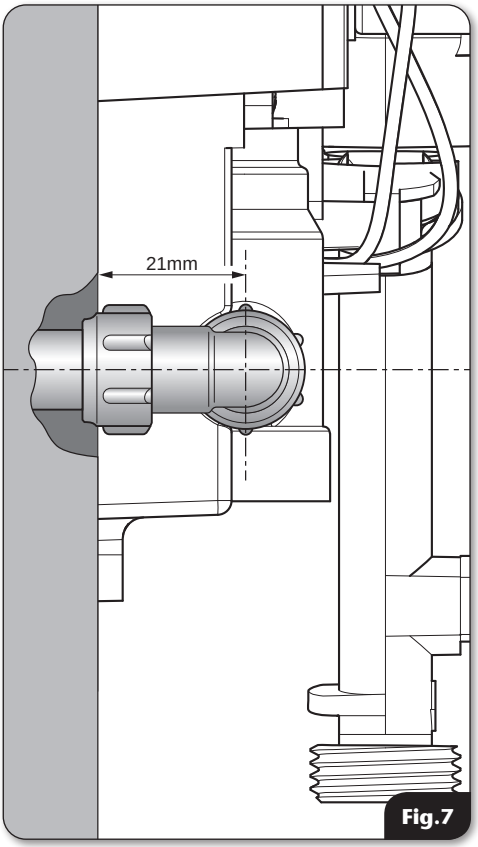

Fig.7

PLUMBING INSTALLATION

Plumbing to be carried out before wiring

- **DO NOT** use jointing compounds on any pipe fittings for the installation.
- **DO NOT** solder fittings near the shower unit as heat can transfer along the pipework and damage components.
- Compression fittings **MUST** be used to connect to the inlet of the shower **(fig.7)**. Push-on fittings must **NOT** be used as full engagement cannot be guaranteed.
- If installing a feed pipe from the back or bottom, the centre of the inlet valve to the wall surface is 21mm **(fig.7)**.

NOTE: *If entry is from the back, the nut of the compression fitting will be partially behind the surface of the wall. This area MUST be left clear when plastering and tiling around the pipework in order to make the nut accessible for future adjustments.*

NOTE: *An additional stopvalve (complying with Water Regulations) must be fitted in the mains water supply to the shower as an independent means of isolating the water supply should maintenance or servicing be necessary. If this isolator is fitted in a loft space, the loft must have a fixed access ladder and be boarded, with appropriate lighting from the access point to the isolator.*

IMPORTANT: *Before completing the connection of the water supply to the inlet of the shower, flush out the pipework to remove all swarf and system debris. This can be achieved by connecting a hose to the pipework and turning on the mains water supply long enough to clear the debris to waste.*

ELECTRICAL INSTALLATION

IMPORTANT: DO NOT USE ADDITIONAL TERMINAL BLOCKS/WIRES OTHER THAN THOSE FACTORY FITTED INSIDE THE APPLIANCE. FAILURE TO COMPLY WITH THIS WILL INVALIDATE YOUR GUARANTEE.

SWITCH OFF THE ELECTRICITY SUPPLY AT THE MAINS.

- The supply cable **MUST** be secured either by routing through conduit, in trunking, or by embedding in the wall, in accordance with IEE regulations.

NOTE: *Conduit entry can only be from rear. Deviations from the designated entry points will invalidate product approvals. The cable entry points are listed on* **page 8**.

- Seal around rear entry cable to prevent water ingress into the wall.

FIT TO THE WALL & CONNECT THE SHOWER SUPPLIES

- The water inlet filter assembly has been designed to allow left or right fitting (**fig.8).** Decide the inlet direction and then turn the inlet either left or right.

IMPORTANT!
The water inlet MUST ONLY be used in the Left or Right entry position.

Fig.8

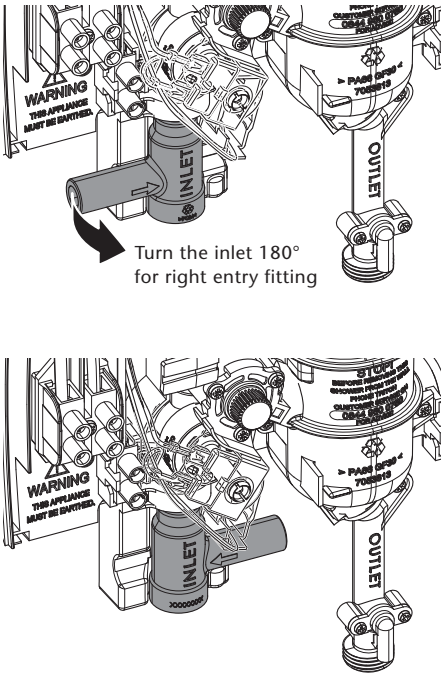

Fig.9

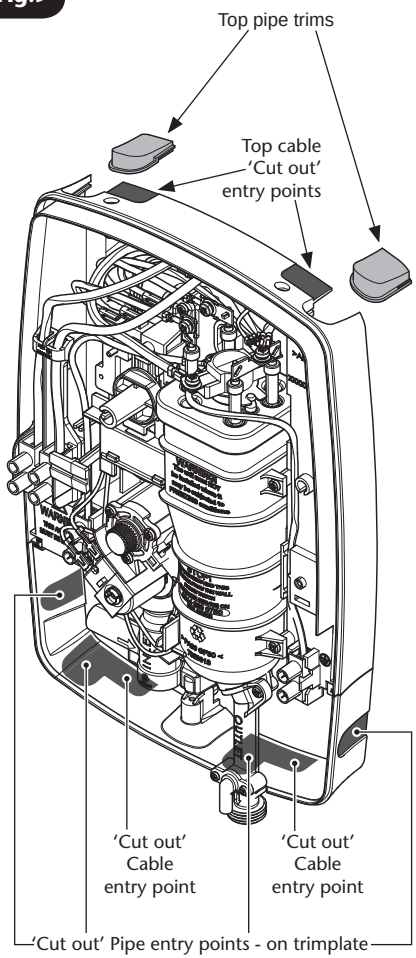

The backplate has removable top trims (top left and top right) that may be used for pipe entry and two additional sections (top left and top right) that may **ONLY** be used as a 'cut out' for top electrical cable entry **(fig.9)**.

The showers bottom trimplate has also been designed with four 'cut out' bottom/side water pipe access points and two 'cut out' electrical cable access points **(fig.9)**.

- Decide which entry points are to be used for the water pipe entry and electrical cable entry.
- Once chosen, remove either the appropriate trim or if 'cut outs' have been chosen, remove them using a junior hacksaw, file or appropriate knife.

PLEASE NOTE: NONE of the 'cut outs' are designed to 'snap out'. ONLY a junior hacksaw, file, or suitable knife should be used. Excessive damage to the backplate or lower trimplate outside the prescribed areas marked in **(fig.9)** may invalidate product specifications and warranty.

Fitting Procedure

- Turn off water supply either at the mains stopvalve or the isolating stopvalve.
- Temporarily connect the mains water supply to the inlet of the shower using a 15mm x 15mm compression fitting.
- Use the backplate as a template making sure it is level and mark the fixing holes **(fig.10)**. The top and one of the bottom two fixing holes should be sufficient to hold the shower.
- Remove the unit from the wall. Drill and plug the wall. An appropriate drill bit should be used. If the wall is plasterboard or a soft building block, appropriate wall plugs should be fitted.
- Screw the top fixing screw into position leaving the base of the screw head protruding 6mm out from the wall.
- Hook the backplate over the top screw and fit the bottom fixing screws into position, but **DO NOT** fully tighten the screws at this stage. The fixing holes are elongated to allow for out of square adjustment after the plumbing connection has been completed.
- Connect the mains water supply to the inlet **DO NOT** use excessive force when making the connection.
- Make sure the backplate is square on the wall and tighten the retaining screws which hold it to the wall.
- Turn on the mains water supply and check for leaks in the pipework connection to the shower.

NOTE: ***At this stage no water can flow through the unit.***

IMPORTANT: ***A suitable sealant should always be used to seal around the incoming pipework to prevent water entering the wall.***

Fig.10

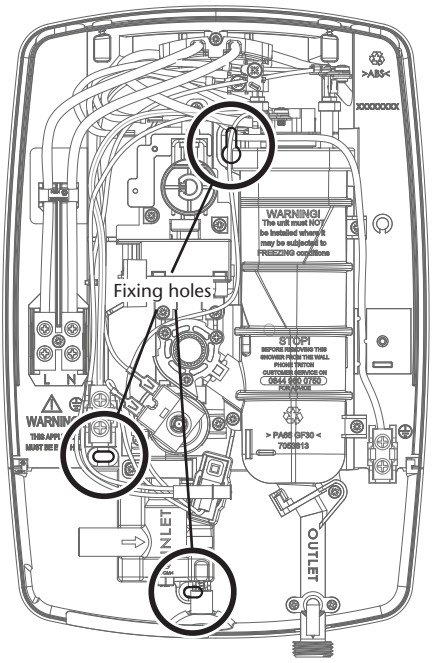

⚠ WARNING

Check there are no hidden cables or pipes before drilling holes for wall plugs. Use great care when using power tools near water. The use of a residual current device (RCD) is recommended when using power tools.

Fig.11

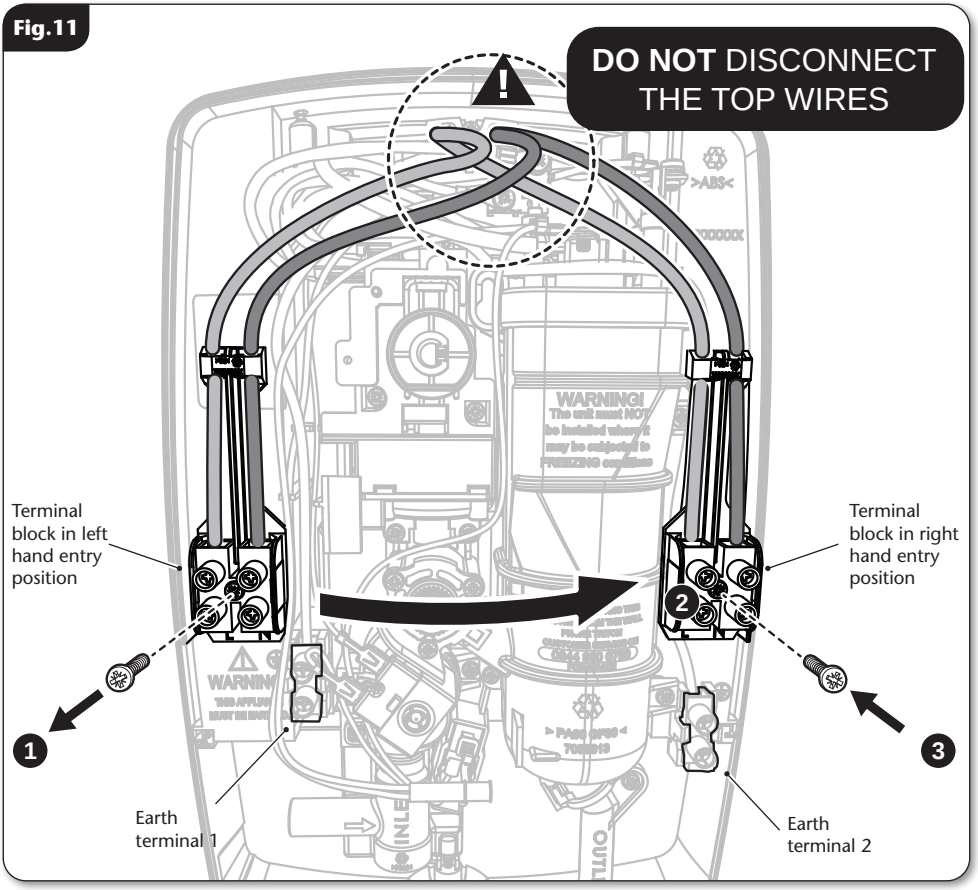

Terminal block - left or right entry

The terminal block is factory assembled as a left electrical entry, but this can be altered to a right electrical entry **(fig.11).**

IMPORTANT: ***DO NOT*** *disconnect the top wires.*

1. Remove the retaining screw from the terminal block.
2. Move the terminal block over to the right hand side of the unit and locate the lugs on the back of the terminal block carrier into the backplate.
3. Insert the retaining screw back through the terminal block to secure it.

- Install the Earth cable to Earth terminal **1** or **2** to match the left or right terminal block position.
- Route the cable into the shower unit for connection to the terminal block as follows:

Earth cable to terminal marked ⏚
Neutral cable to terminal marked **N**
Live cable to terminal marked **L**

- Once the cables have been installed and securely tightened the trimplate will need to be fitted.

Fig.12 shows a schematic wiring diagram.

IMPORTANT: ***When connecting the cable fully tighten the terminal block screws and make sure that no cable insulation is trapped under the screws. Loose connections can result in cable overheating.***

NOTE: ***The supply cable earth conductor must be sleeved. The outer sheath of the supply cable must be stripped back to the minimum.***

- The use of connections within the unit or other points in the shower circuit to supply power to other equipment i.e. extractor fans, pumps, etc. will invalidate the guarantee.
- **DO NOT** switch on the electricity supply until the shower cover has been fitted.

NOTE: ***The elements on UK models are to 240V specification and will give a lower kW rating if the voltage supply is below 240V.***

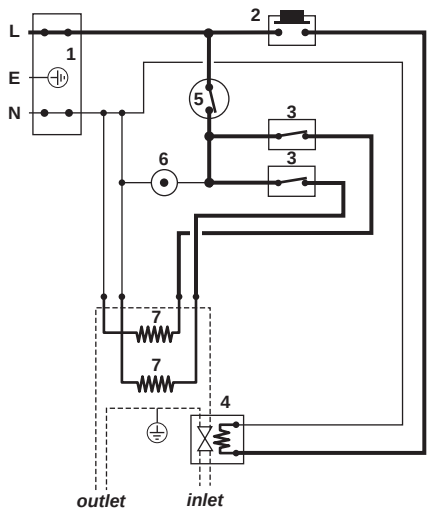

1. Terminal block
2. Start/Stop switch
3. Power selector Microswitch
4. Solenoid valve
5. Thermal cut-out (main)
6. Neon - power
7. Element

Fig.12

FITTING THE COVER

Figs 13, 14, 15 and **16** show the correct control knob position when replacing the cover.

- Clip the neon into the back of the Start/Stop assembly on the inside of the cover in the correct orientation (shown below, right.)
- Check to ensure that the wiring is not trapped and replace the cover squarely to the backplate and guide into position so that the knobs locate correctly into the splined spindles.
- **Should any difficulty arise, recheck the points above.**
- While applying slight pressure to the cover, secure in position with the retaining screws.
- **Fit the Riser Rail and Kit** (see kit instructions).

⚠ WARNING ⚠

COVER RETAINING SCREWS

ONLY the **SUPPLIED SCREWS** should be used. The use of non supplied screws **WILL** invalidate product specifications & warranty.

CORRECT NEON FITTING ORIENTATION

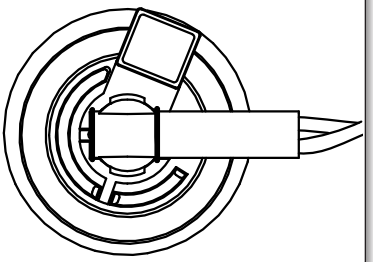

A.With the cover off the shower, turn the POWER selector spindle clockwise until the flat section is on the left hand side **(fig.13).**

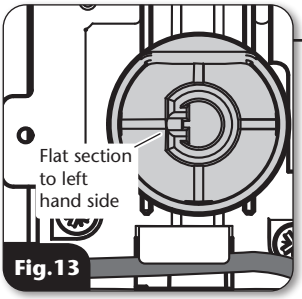

Fig.13

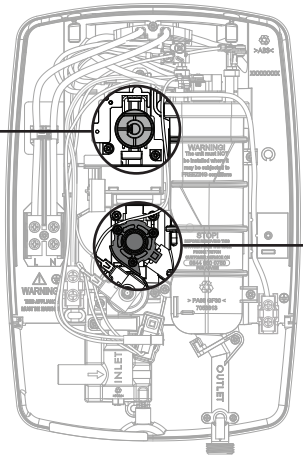

B. With the cover off the shower, turn the stabiliser valve spindle fully clockwise until resistance is felt **(fig.14).**

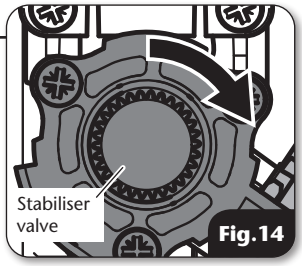

Fig.14

C. With the cover off the shower, turn the power selector to the COLD position **(fig.15).**

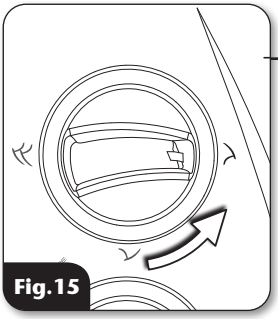

Fig.15

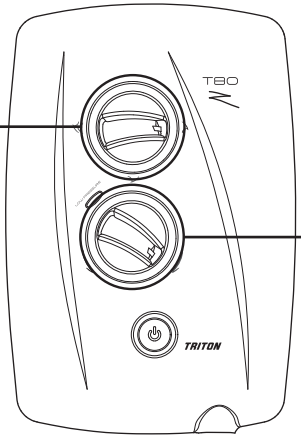

D. With the cover off the shower, turn the temperature control so that it goes to Maximum HOT **(fig.16).**

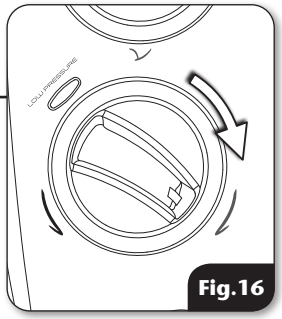

Fig.16

⚠ WARNING

Before normal operation of the shower, it is essential the following commissioning procedure is completed correctly.

COMMISSIONING PROCEDURE

The first operation of the shower is intended to flush out any remaining unit debris and to make sure the heater unit contains water before the elements are switched on.

This operation **MUST** be carried out **WITH** the flexible hose screwed to the outlet but **WITHOUT THE SHOWER HEAD ATTACHED**. Make sure the outlet of the flexible hose is directed to waste.

IMPORTANT: ***Failure to turn the control to the minimum flow position MAY cause the PRD to operate.***

1. Before turning on the electric and mains water supplies to the shower, make sure that the power selector is at the **COLD** position and the temperature control is turned to fully clockwise to **MINIMUM** flow **(fig.17).**
2. Turn on the mains water supply to the shower at the isolating stopvalve and then turn on the electric supply to the shower at the isolating switch.
3. Press the **Start/Stop** button **(fig.17)** and wait until water starts to flow from the flexible hose.
4. Slowly rotate the temperature control fully **anti-clockwise** to the **MAXIMUM** flow position **(fig.18)**. It will take about thirty seconds for a smooth flow of water to be obtained while air and any debris is flushed from the shower.

- When a smooth flow of water is obtained, rotate the temperature control from **MINIMUM** to **MAXIMUM** several times to release any trapped air within the unit.
- Once flushing out has been completed, stop the water flow by pressing the **Start/Stop** button.
- Fit the shower head to the flexible hose and place in the shower head holder.

The shower is now ready for normal operation.

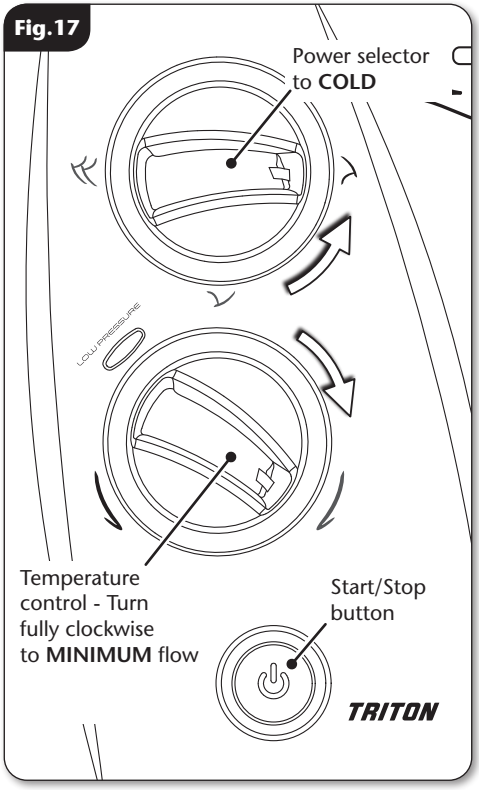

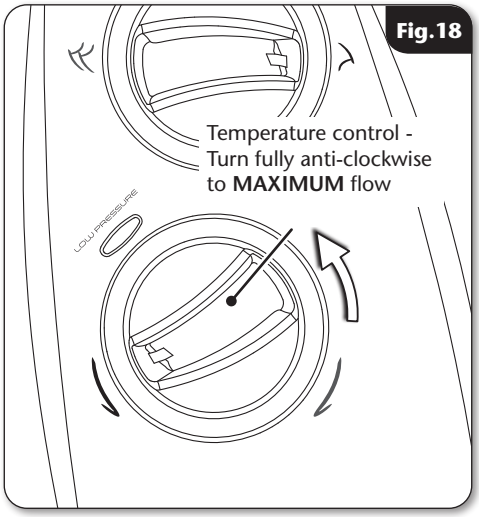

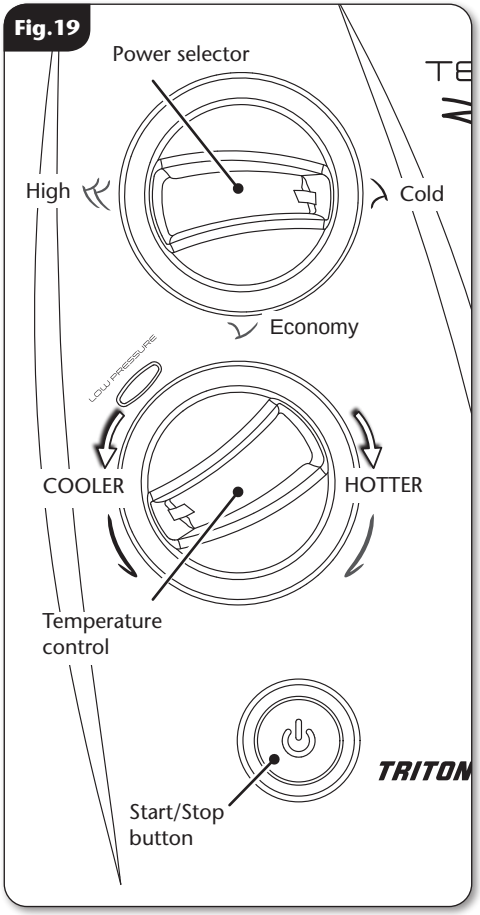

OPERATING THE SHOWER - (fig.19)

Make sure the commissioning procedure has been carried out.

To Start the Shower

- Press the Start/Stop button and water will flow.

To Stop the Shower

- Press the Start/Stop button and water will cease to flow.
- After stopping the unit **MUST** be isolated via the 45amp isolating switch.

⚠ WARNING

If restarting immediately after stopping, be aware that a slug of hot water will be expelled for the first few seconds.

To Use the Power Selector

The power selector has three positions - **COLD, ECONOMY** and **HIGH**.

Cold setting - single blue line.

- The cold setting does not provide any heat from the heater can to the incoming water.

Economy setting - single red line.

- Economy uses only one of the elements within the heater can.

NOTE: ***If the stated flow rate required for the unit cannot be met due to low water pressure, it will be necessary to operate the unit on this setting during the warmer months because of flow rate limitations entering the unit.***

High Setting - double red lines.

- High uses both of the elements within the heater can.

IMPORTANT: ***It will take a few seconds for the temperature to stabilise once changes have been made.***

To Adjust the Shower Temperature - Economy and High Settings Only

- The water temperature is altered by increasing or decreasing the flow rate of the water through the shower via the temperature control **(fig.19).**
- After obtaining your showering temperature, the knob can be left as the normal setting and should only need altering to compensate for seasonal changes in ambient water temperature.

NOTE: ***The preferred knob position on ECONOMY will give a different temperature to the same position on HIGH.***

To Decrease the Shower Temperature

- Turning the temperature control **anti-clockwise** will increase the flow of water through the shower and make the water **colder**.

To Increase the Shower Temperature

- Turning the temperature control **clockwise** will decrease the flow of water through the shower and make the water **hotter**.

NOTE: ***It is advisable that the showering temperature is satisfactory by testing with your hand before stepping under the shower head. There will always be a time delay of a few seconds between selecting a flow rate and the water reaching the stable temperature for that flow rate.***

OPERATING FUNCTIONS

Power On Indicator (fig.20)

When the electricity supply to the shower is switched on at the isolating switch, the neon in the START/STOP button will illuminate.

TP – Temperature Protection

During normal operation if the temperature exceeds the showering safety limit the power to the elements will be removed completely, although water will continue to flow. When the temperature has cooled sufficiently, power to the elements will be automatically restored to the settings at the time of interruption.

Abnormal Safety Cut-out

The unit is fitted with a non-resettable thermal cut-out safety device. In the event of abnormal operation which could cause unsafe temperatures within the unit, the device will disconnect the heating elements. It will require a visit from a qualified engineer to determine the nature of the fault and replace the safety device, once the unit has been repaired.

Low Pressure Indicator

If this indicator is on, this means the water pressure has fallen below the minimum required for correct operation of the shower, resulting in the low pressure cut-out operating. This switches off power to the heating elements preventing any undue temperature rises (water will continue to flow). Power will automatically be restored when adequate water pressure returns.

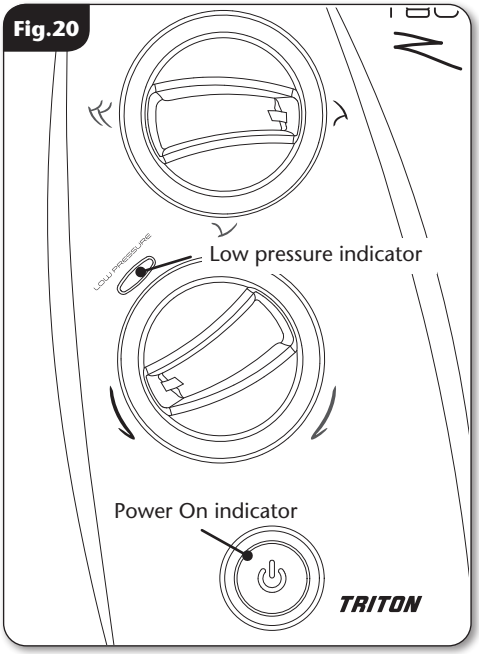

NOTE: *In normal use, it is in order to leave the water supply permanently on to the shower unit, but as with most electrical appliances,* ***the unit MUST be switched off at the isolating switch when not in use.***

Instructions for Installers and Service Engineers Only

CLEANING THE FILTER

It is recommended that the filter is periodically cleaned in order to maintain the performance of the shower. It is essential that this operation is carried out by a competent person.

IMPORTANT: ***Before servicing, switch off the electricity supply at the mains.***

- Switch off the water supply at the isolator valve.
- The inlet filter is situated inside the water inlet fitting **(fig.21)**.
- To gain access to the filter, remove the cover and bottom left trimplate.
- Unscrew the filter cap from the bottom of the inlet pipe.
- Inspect the 'O' ring for damage when the filter cap is removed.
- When cleaning the filter, **DO NOT** use a sharp object as it will cause damage. It is preferable to use an old toothbrush or similar.
- To reassemble, follow the procedure in reverse.
- Make sure that the sealing 'O' ring is in place.
- **DO NOT** over tighten the filter cap on reassembly.

NOTE: Full commissioning procedure will need to be performed after cleaning of the filter - see Commissioning section for procedure.

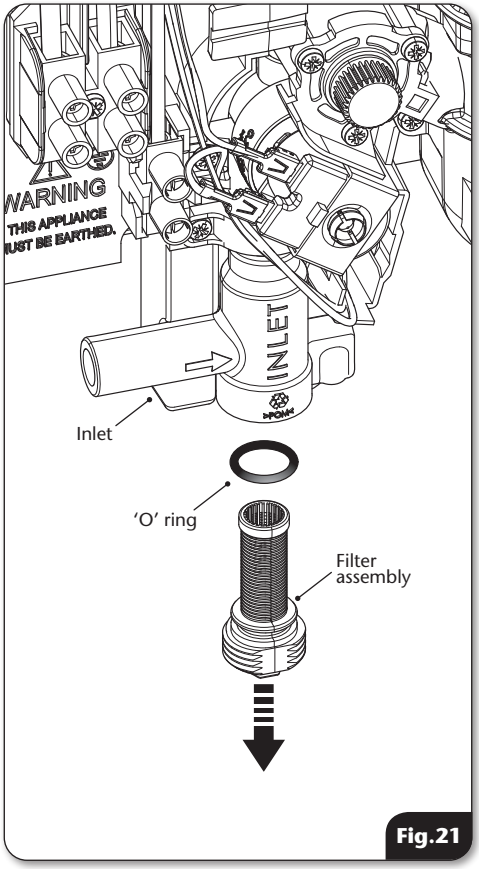

Fig.21

FAULT FINDING

IMPORTANT: Switch OFF the electricity at the mains supply and remove the circuit fuse before attempting any fault finding inside the unit.

Problem	Cause	Action
1 Shower inoperable, no water flow.	***1.1*** Interrupted power supply.	***1.1.1*** Blown fuse or circuit breaker. Check supply. Renew or reset fuse or circuit breaker. If it fails again, consult a qualified electrician.
	1.2 Unit malfunction.	***1.2*** Power cut. Check other appliances and if necessary, contact local Electricity Supply Co. ***1.2.1*** Have unit checked. Contact Customer Experience.
2 Water too hot.	***2.1*** Not enough water flowing through the shower.	***2.1.1*** Increase flow rate via temperature control. ***2.1.2*** Blocked shower head — clean or replace blocked sprayplate in shower head.
	2.2 Blockage in supply.	***2.2.1*** Check if stop valves are fully open. Check if a blockage in the inlet filter.
	2.3 Increase in ambient water temperature.	***2.3.1*** Readjust flow rate to give increased flow. ***2.3.2*** Select ECONOMY power.
3 Water temperature cycling hot/cool at intervals.	***3.1*** Heater cycling on temperature limiter.	***3.1.1*** See *'Water too hot'* causes 2.1, 2.2 and 2.3 and their appropriate action/cures. If it continues contact Customer Experience.
4 Water too cool or cold.	***4.1*** Too much flow.	***4.1.1*** Reduce flow rate via temperature control. ***4.2.1*** Is water supply mains or tank fed?
	4.2 Water pressure below minimum required (see rating label).	***4.2.2*** If tank fed, replumb to mains water supply or see 4.2.4. ***4.2.3*** If mains fed, make sure that mains stopvalve is fully open and that there are no other restrictions in the supply while shower is in use, or see 4.2.4. ***4.2.4*** Fit pump to give minimum pressure (see rating label). Contact Customer Experience for advice.
	4.3 Reduction in ambient water temperature.	***4.3.1*** Readjust flow rate to give reduced flow. ***4.3.2*** Select HIGH power.

Problem	Cause	Action
4 Water too cool or cold. *(continued)*	***4.4*** Electrical malfunction.	***4.4.1*** Have unit checked by suitably qualified electrician or contact Customer Experience.
	4.5 Safety cut-out operated.	***4.5.1*** Thermal safety cut-out device has operated. Have the unit checked by a suitably qualified engineer or contact Customer Experience.
5 Shower varies from normal temperature to cold during use.	***5.1*** Water pressure has dropped below minimum required.	***5.1.1*** Wait until the water pressure resumes to normal.
6 Pressure relief device has operated (water ejected from PRD tube).	***6.1*** Blocked shower head.	***6.1.1*** Clean or replace blocked sprayplate in shower head and then fit new PRD.
	6.2 Twisted/blocked flexible shower hose.	***6.2.1*** Check for free passage through hose. Replace the hose if necessary and fit new PRD.
	6.3 Shower head not removed while commissioning.	***6.3.1*** Fit new PRD. Commission unit with shower head removed.
7 Shower fails to shut off.	***7.1*** Faulty start/stop switch.	***7.1.1*** Replace start/stop switch.
	7.2 Debris in the solenoid.	***7.2.1*** Replace solenoid valve.

Note: **Identify the cause of operation before fitting a new PRD unit. When fitting a new PRD, follow the commissioning procedure.**

It is advised all electrical maintenance/repairs to the shower should be carried out by a suitably qualified person.

In the unlikely event of unit failure other than detailed in the fault finding page, please contact Customer Experience for advice.

To purchase a genuine Triton spare part for your product, please visit **www.tritonshowers.co.uk/spares** for product codes and prices. Alternatively please call our Customer Experience team on **024 7637 2222** to order direct. Please have your model name available.

WEEE Directive – Policy Statement

As a producer and a supplier of electric showers, Triton Showers is committed to the protection of the environment via our own environmental policy and compliance with the **WEEE directive.**

Triton Showers is fully registered with the Environment Agency under the following scheme:

Repic: Producers take-back scheme (PTS), registration number WEE/EJ3466QV
Valpak: Distributor Takeback Scheme (DTS), registration number DTS-700160

All our electric products are labelled accordingly with the crossed out wheeled bin symbol. This indicates, for disposal purposes at end of life, that these products must be taken to recognised collection points, such as local authority sites/local recycling centres; this will be free of any charges. **Do not return to Triton Showers.**

To START or STOP your shower.

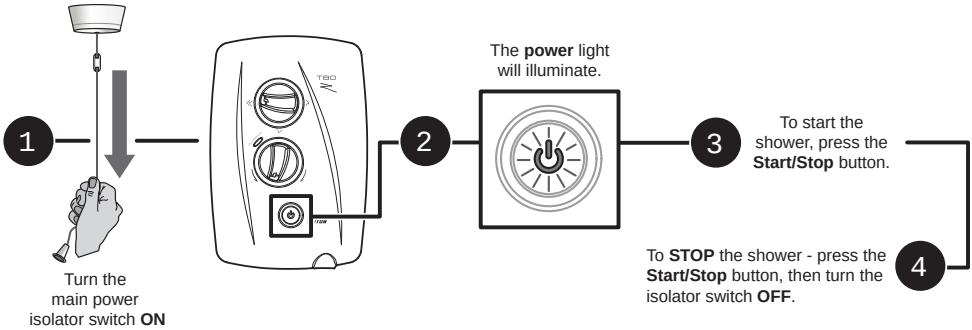

To alter the FLOW and Temperature of your shower - HEAT SETTINGS ONLY.

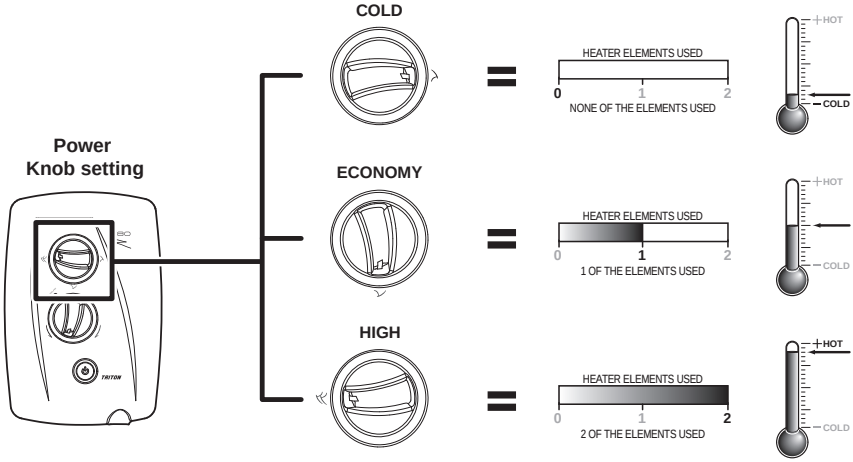

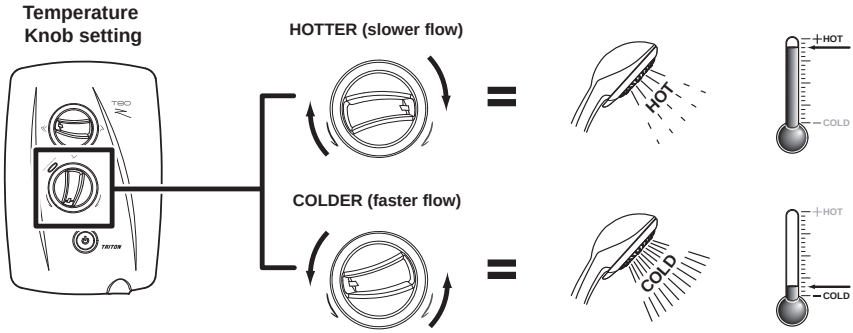

UK SERVICE POLICY

In the event of a product fault or complaint occurring, the following procedure should be followed:

DO NOT REMOVE THE PRODUCT

1. Telephone Customer Experience on **024 7637 2222** having available your details including post code, the model number and power rating of the product, together with the date of purchase and, where applicable, details of the particular fault.
2. If required, the Customer Experience Advisor will arrange for a qualified engineer to call.
3. All products attended to by a Triton service engineer must be installed in full accordance with the Triton installation guide applicable to the product; this can be downloaded free at www.tritonshowers.co.uk/guides.
4. Our engineer will require local parking and if a permit is required, this must be available to the engineer on arrival at the call.
5. If loft access is required for isolation or to complete a repair, the loft must have a fixed access ladder and be boarded, with appropriate lighting from the access point to and around the repair area.
6. It is essential that you or an appointed representative, who must be over 18 years of age, is present for the duration of the service engineer's visit. If the product is in guarantee you must produce proof of purchase.
7. Where a call under the terms of guarantee has been booked and the failure is not product related (i.e. scaling and furring, incorrect water pressure, pressure relief device operation or electrical/plumbing installation fault) a charge will be made. A charge will also be issued if nobody is at the property when the service engineer calls or adequate parking/permit is not available.
8. If the product is no longer covered by the guarantee an up-front fixed fee will be charged before the site visit.
9. Your receipt must be retained as proof of purchase. Should proof of purchase not be available on an 'in-guarantee' call, or should the service engineer find that the product is no longer under guarantee, the engineer will charge the same fixed price and will request payment prior to departing. If payment is not made on the day an administration charge will be added to the fixed charge.
10. If a debt is outstanding from a previous visit, or from any other Triton purchase, Triton reserves the right to withhold service until the debt has been settled.
11. Triton takes the health, safety and wellbeing of its employees very seriously and expects customers to treat all staff members with respect. Should any employee feel threatened or receive abuse, either verbally or physically, Triton reserves the right to withhold service.

Replacement Parts Policy

In line with AMDEA guidelines, Triton retains functional spares for as long as there is a market for them and in most cases, well beyond. Due to the vast array of product types, the life cycle of products can vary and therefore so can the length of time parts can be supplied. Spare parts can be ordered via our online spare parts store or by telephoning Triton Customer Experience team on **024 7637 2222**. Payment should be made by credit / debit card (excluding American Express or Diners Card). Payment can also be made by pre-payment of a pro-forma invoice, by cheque or postal order.

Telephone orders are based on information given during the call. Before contacting Triton, please verify your requirements using the Triton website or your professional installer. Triton cannot accept liability for incorrect part identification.

TRITON UK STANDARD GUARANTEE

This guarantee applies only to products installed within the United Kingdom and does not apply to products used commercially. This guarantee does not affect your statutory rights.

With the exception of accessories, Triton guarantee the product against all manufacturing defects for a period of **2 years** (for domestic use only) from the date of purchase, provided that it has been installed by a competent person in full accordance with the fitting instructions.

All accessories such as shower heads, hoses and riser rails carry a **1 year** parts only guarantee against manufacturing defects.

Any part found to be defective during this guarantee period we undertake to repair or replace at our option without charge, so long as it has been properly maintained and operated in accordance with the operating instructions and has not been subject to misuse or damage. This product must not be taken apart, modified or repaired except by a person authorised by Triton.

What is not covered:

1. Breakdown due to:
   a) use other than domestic use by the property occupants;
   b) wilful act or neglect;
   c) any malfunction resulting from the incorrect use or quality of electricity, gas or water or incorrect setting of controls;
   d) failure to install in accordance with this installation guide.
2. Claims for missing parts once the product has been installed.
3. Repair costs for damage caused by foreign objects or substances.
4. Total loss of the product due to non-availability of parts.
5. Compensation for loss of use of the product or consequential loss of any kind.
6. Call out charges due to an abortive visit or where no fault has been found with the appliance.
7. The cost of repair or replacement of isolating switches, electrical cable, fuses and/or circuit breakers or any other accessories installed at the same time. Replacement of a Pressure Relief Device that only activates when the shower outlet is blocked is also excluded.
8. The cost of routine maintenance, adjustments, overhaul modifications or loss or damage arising therefrom, including the cost of repairing damage, breakdown, malfunction caused by corrosion, furring, frost or exposure to freezing conditions.
9. Callout charges where the water supply cannot be isolated, this includes consequential losses arising from unserviceable supply valves, or inaccessible product or valves located in a loft space without suitable access.

For the latest Terms & Conditions please see:
www.tritonshowers.co.uk/terms

PLEASE NOTE PRODUCT REGISTRATION IS ONLY AVAILABLE TO UNITS PURCHASED & INSTALLED IN THE UK

Triton Showers
Triton Road
Nuneaton
Warwickshire, CV11 4NR

Triton is a division of Norcros Group (Holdings) Limited

Customer Experience: 024 7637 2222
Trade Installer Hotline: 024 7637 8344
www.tritonshowers.co.uk
E-mail: CXsupport@tritonshowers.co.uk
E-mail: technical@tritonshowers.co.uk

Triton reserve the right to change product specification without prior notice. E&OE. © TRITON SHOWERS 2025